AIO® Ceiling Ducted with ERV (Gen 4)

Product Data Sheet



innova

AHRI CERTIFIED® www.ahridirectory.org Unitary Small HP AHRI Standard 210/240

C ETL US LISTED Intertek

neep

Passivhaus Institut

energy ENERGY STAR

CONTACT INFO

VIP Customer/Technical Support
Email: vip@innova.co
Phone: (212) 204-2700

DISCLAIMER

This documentation is intended for informational use only and should not be construed as a binding representation or contract. This documentation is provided "as is" without warranty of any kind, either express or implied. INNOVA and its affiliates disclaim all liability arising from the use or misuse of this documentation.

Illustrations may not be to scale, and all information and dimensions stated herein are subject to change at any time at the sole discretion of INNOVA. Benefits described herein apply only to the extent that the product is installed correctly in the correct application and used for its intended purpose.

INNOVA is constantly innovating and improving its products and reserves the right to modify product design and specifications without notice, and without incurring any obligations.

CERTIFICATIONS & LISTINGS

The AHRI Certified® mark indicates INNOVA's participation in the AHRI Certification program. For verification of individual certified products, go to www.ahridirectory.org.

ETL Listed. Control Number: 5032306. Conforms to: UL 60335-2-40:2022 Ed.4 | CSA C22.2#60335-2-40:2022 Ed.4 | UL 60335-1:2016 Ed.6 | CSA C22.2#60335-1:2016 Ed.2

MODEL NUMBER NOMENCLATURE

The code identifies the family, model, version, size, voltage, accessories, refrigerant type, and ERV option. See the diagram below for details.

Figure 1. AIO® nomenclature

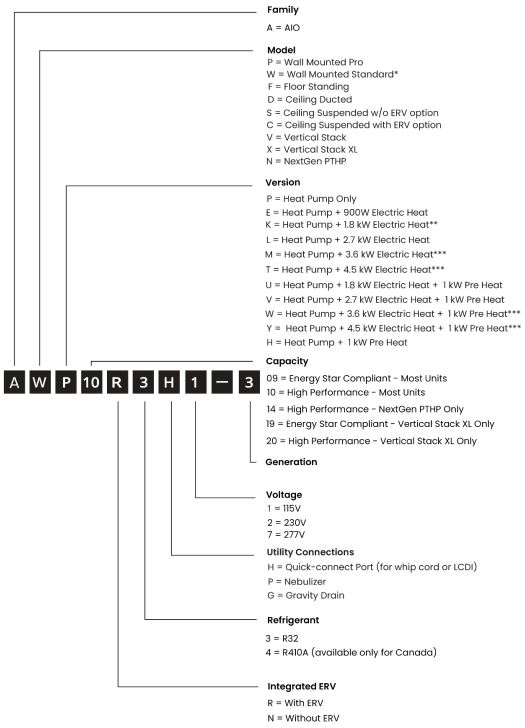

* 8" Vents : Just generation (e.g. = 3)

6" Vents : Generation + SP (e.g. = 3SP)

** Field convertible to 900W

*** AIO® Vertical Stack XL **Only**

AIO® is a registered trademark of INNOVA.
Copyright © 2026 INNOVA. All rights reserved.

CONTENTS

1. READING THIS DOCUMENTATION..... 4

1.1 Documentation-specific language..... 4

1.2 Annotation icons..... 4

2. AIO® CEILING DUCTED UNIT OVERVIEW..... 4

2.1 Components and structure..... 4

2.2 Key features..... 5

2.3 Optional Accessory: Rough-in Box..... 5

3. AIRFLOW..... 6

3.1 Bottom Return..... 6

3.2 Side Return..... 6

3.3 Fan curves..... 6

4. INSTALLATION..... 7

4.1 Air balancing requirements..... 8

4.2 Startup airflow commissioning..... 8

4.3 Low ambient heating configuration requirement..... 8

4.4 Ambient temperature protection..... 8

4.5 Site requirements..... 8

4.6 Outdoor air louver options..... 9

4.7 Clearance requirements..... 9

5. TECHNICAL SPECIFICATIONS..... 10

5.1. High Performance..... 10

5.1.1 Cooling..... 10

5.1.2 Heating - Heat pump only..... 10

5.2. Energy Star Compliant..... 10

5.2.1 Cooling..... 10

5.2.2 Heating - Heat pump only..... 11

5.3. Airflow..... 11

5.3.1 Indoor..... 11

5.3.2 Outdoor..... 11

5.4. Sound..... 11

5.5 ERV..... 11

5.6 General..... 12

5.6.1 Controls..... 12

5.6.2 Modes..... 12

5.6.3 Condensate..... 12

5.6.4 Compressor..... 12

5.6.5 Physical..... 12

5.6.6 Insulation..... 12

5.7. Electrical..... 12

5.7.1 General..... 12

5.7.2 Motors..... 13

5.7.3 Heater Output (W) and Heater Current (A) vs. Supply Voltage..... 13

6. LOGIC..... 13

6.1 Backup electric heat..... 13

6.2 ERV defrost timer..... 13

6.3 ERV preheater..... 13

6.4 Post heater..... 14

6.4.1 Post-heater modes..... 14

6.5 Dehumidification..... 14

7. WIRING DIAGRAM..... 14

8. DIMENSIONS..... 15

9. WARRANTY..... 15

9.1 Basic coverage..... 15

9.2 Optional extended coverage..... 15

9.3 Validation requirements..... 15

10. SUBMITTALS..... 16

10.1 115V Heat Pump + ERV - High Performance..... 16

10.2 115V Heat Pump + Elec Heat + ERV - High Performance..... 17

10.3 230V Heat Pump + ERV - High Performance..... 18

10.4 230V Heat Pump + 1,800W Elec Heat + ERV - High Performance..... 19

10.5 230V Heat Pump + 2,700W Elec Heat + ERV - High Performance..... 20

10.6 230V Heat Pump + 1kW Preheat + ERV - High Performance..... 21

10.7 230V Heat Pump + 1,800W Elec Heat + 1kW Preheat + ERV - High Performance..... 22

10.8 230V Heat Pump + 2,700W Elec Heat + 1kW Preheat + ERV - High Performance..... 23

10.9 115V Heat Pump + ERV - Energy Star Compliant..... 24

10.10 115V Heat Pump + Elec Heat + ERV - Energy Star Compliant..... 25

10.11 230V Heat Pump + ERV - Energy Star Compliant..... 26

10.12 230V Heat Pump + 1,800W Elec Heat + ERV - Energy Star Compliant..... 27

10.13 230V Heat Pump + 2,700W Elec Heat + ERV - Energy Star Compliant..... 28

10.14 230V Heat Pump + 1kW Preheat + ERV - Energy Star Compliant..... 29

10.15 230V Heat Pump + 1,800W Elec Heat + 1kW Preheat + ERV - Energy Star Compliant..... 30

10.16 230V Heat Pump + 2,700W Elec Heat + 1kW Preheat + ERV - Energy Star Compliant..... 31

1. READING THIS DOCUMENTATION

Some language and symbols in this documentation have specific meanings.

1.1 Documentation-specific language

Reference to the product
Any reference to “the unit” refers to the AIO® Ceiling Ducted with ERV (Gen 4) unit.

Unit orientation
All directions in this guide (left, right, top, bottom) are given from the perspective of facing the unit.

1.2 Annotation icons

Annotations are provided throughout this guide. It is essential to read each carefully and follow the instructions stated.

Indicates critical information for correct operation or installation.

Indicates supplemental information, tips, or useful background information.

2. AIO® CEILING DUCTED UNIT OVERVIEW

An AIO® Ceiling Ducted unit can be discreetly installed above a ceiling and is ideal for single or multi-room applications. The return can be from the sides or the bottom for maximum flexibility. Use this unit anywhere ducting is required. Use with any interior grille and louver to provide additional design flexibility. A bathroom exhaust can be connected to the dedicated stale air exhaust.

2.1 Components and structure

Figure 2. What’s Inside

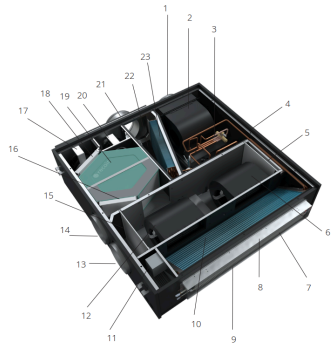

1	Condenser + stale air exhaust vent	**13**	Return air vent
2	Condenser + stale air exhaust fan	**14**	ERV stale air supply
3	Twin rotary inverter compressor	**15**	Return air filter
4	Return air connection	**16**	MERV 13 filter
5	Return air filter	**17**	Fresh air ECM supply fan
6	ECM supply fan	**18**	MERV 13 filter
7	Electric heat strip	**19**	ERV Hybrid Recovery Core
8	Supply air connection	**20**	Stale air ECM exhaust fan
9	Touch controller	**21**	Condenser + fresh air intake
10	High-efficiency indoor coil	**22**	Condensate drain
11	Controllers Connection Terminal	**23**	High efficiency outdoor coil
12	ECM supply fan		

2.2 Key features

No outdoor unit
The single package design means that there is no outdoor unit, freeing up space on rooftops and at ground level and enabling installations in buildings without space for an outdoor unit.

Twin rotary BLDC inverter compressor
The state-of-the-art, twin brushless DC (BLDC) inverter compressor operates efficiently, quietly, and with minimal vibration. AIO®'s Ceiling Ducted unit is ideal for any room or area that requires between 3,100 and 10,000 BTU/hr.

Integrated ERV
AIO® Ceiling Ducted's integrated ERV eliminates the requirement of installing an independent ERV system, ducting, electrical work, and engineering.

Recovery plus™
With a patent-pending innovation, AIO® Ceiling Ducted utilizes the heat or cold remaining in the air after passing through the recovery core to lower or raise the temperature of the condenser, providing a boost in performance and efficiency.

Integrated bathroom exhaust system
The integrated stale air exhaust can be used for bathrooms, maintaining perfect air pressure and eliminating the need for a dedicated exhaust system.

MERV 13 clean air
Clean outdoor air is essential to well-being and safety. The MERV 13 filter ensures that all air entering the room or home is clean and safe. Additionally, stale air is passed through a second MERV 13 filter, keeping the core clean.

High-efficiency ECM fans with auto ESP
High-efficiency electronically commutated motor (ECM) fans enable efficient and quiet operation because the EC motor can ramp up or down as required. Automatically adjusted external static pressure ensures correct airflow.

Cold climate heat pump
The heat pump functions efficiently in temperatures as low as 5°F (-15°C) outdoors, and will continue to operate at colder temperatures, even below -5°F (-20.6°C).

Quiet
With whisper-quiet operation as low as 27 decibels, the occupant will barely notice that the AIO® Ceiling Ducted unit is operating.

Intelligent defrosting
AIO®'s intelligent defrosting system means more time heating and less time on reverse cycle defrost.

Up to 2,700-watt electric heat
The electric heat works in conjunction with the heat pump when the heat pump has insufficient power.

1 kilowatt preheat
Preheats incoming outdoor air before it enters the ERV, reducing heat loss in very cold conditions and allowing the ventilation system to operate effectively in cold climates.

Versatile on/off options
AIO®'s low-voltage connection enables connection to any Building Management System (BMS), key-card system, window sensors, fire alarms, etc. As long as a system can send a signal to the AIO® unit via low voltage, the unit can be easily turned on or off.

Minimal clearances and compact footprint
AIO®'s compact form does not use any line sets. This means that there is no need to access the sides of the unit. You can mount units with as little as ¾" (19.1 mm) clearance on all sides. Compact footprints take up minimal space.

Leak protection
If a drain becomes clogged, the system shuts down, and an alarm is activated. This prevents water damage.

Easy to service
The AIO® unit can be easily maintained and repaired from underneath without having to remove the unit from the ceiling.

Versatile controls
The AIO® unit includes an onboard touch controller and an optional iOS and Android app. AIO® can be used with optional wall-mounted controllers, including a Thin Film Transistor (TFT) with a 7-day program, and third-party controllers from any company, using the optional third-party kit. An optional BACnet and Modbus module enables interfacing with building management systems.

10-Year limited warranty
An industry-leading 10-year limited warranty provides peace of mind.

- Comprehensive onsite two-year parts and labor (after certification).
- 5-year parts warranty.
- 10-year parts warranty on the compressor.

See Warranty Terms and Conditions for details.

2.3 Optional Accessory: Rough-in Box

The optional rough-in box simplifies Ceiling Ducted installation and servicing. Installed before the unit, it provides direct connections for ductwork and utilities, allowing the unit to be installed, removed, or replaced without disconnecting these connections.

The rough-in box is not included with the unit and can be ordered separately.

To view the product data sheet for the rough-in box, click the link below:

AIO Ceiling Ducted (Gen 4) Rough-in Box Product...

Figure 3. Ceiling Ducted Rough-in Box

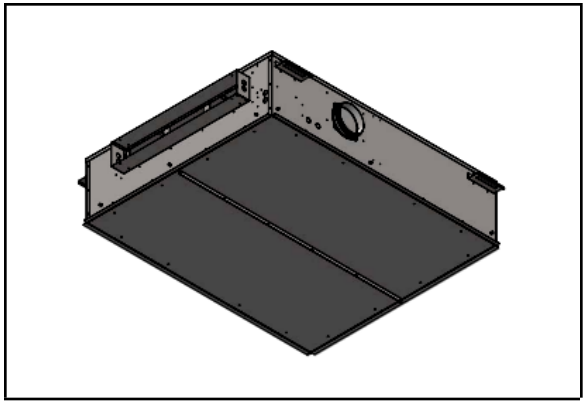

3. AIRFLOW

The AIO® Ceiling Ducted unit is flexible in many ways. It can be fully ducted or used with minimal or no ducting. This flexibility enables AIO® Ceiling Ducted to be placed anywhere in a dwelling, without restrictions.

- **Supply air**
  The rectangular 5.12" x 31.5" (130 mm x 800 mm) supply air connection is ideal for a supply grille or ducting, with up to 0.6" WC (149.5 Pa) external static pressure (combined between return and supply).
- **Stale air exhaust**
  The five-inch round stale air exhaust connection can be used as part of a plenum return without any ducting or can be ducted to a bathroom or multiple locations with up to 0.5" WC (124.5 Pa) external static pressure. If configuring an AIO® Ceiling Ducted unit with a bottom return, the stale air can also be pulled from the bottom return.
- **Return air - bottom option**
  The bottom 8.7" x 22" (221 mm x 558.9 mm) return is designed to be used with a ceiling-mounted return grille or an access panel with an integrated return grille.
- **Return air - sides options**
  The left and right side 6" (15.2 mm) round connections can be ducted to one or more rooms with up to 0.6" WC (149.5 Pa) external static pressure (combined between return and supply). It can also be left open as a side plenum return. With two ECM fans, each with auto ESP, each connection is fully independent. Duct both, leave both open, or duct one and leave one open to a plenum.
- For optimal performance, a fully ducted return configuration is recommended. Both return air openings must remain open and unobstructed during operation. The unit may be installed with both returns ducted, or with one return ducted and the other left open as a side plenum return.
- **Outside air intake**
  The single 8" (203.2 mm) round outside air intake connection provides air for the condenser portion and fresh air for the inside. This can be ducted with up to 0.7" WC (174.4 Pa) external static pressure (combined between intake and exhaust).
- **Outside air exhaust**
  The single 8" (203.2 mm) round outside air exhaust connection is for the condenser portion and the stale air exhaust. This can be ducted with up to 0.7" WC (174.4 Pa) external static pressure (combined between intake and exhaust).

3.1 Bottom Return

Figure 4. Bottom Return

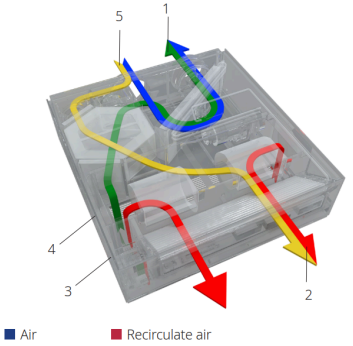

1	Exhaust air	**4**	Stale air
2	Supply air	**5**	Fresh air
3	Return air		

3.2 Side Return

Figure 5. Side Return

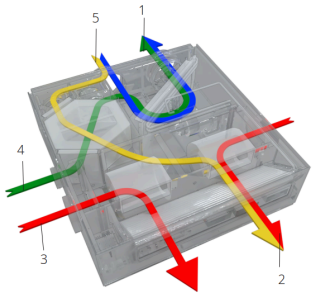

1	Exhaust air	**4**	Stale air
2	Supply air	**5**	Fresh air
3	Return air		

3.3 Fan curves

The following graphs illustrate airflow versus external static pressure at low, medium, and high fan speeds.

Figure 6. Indoor fan performance curves

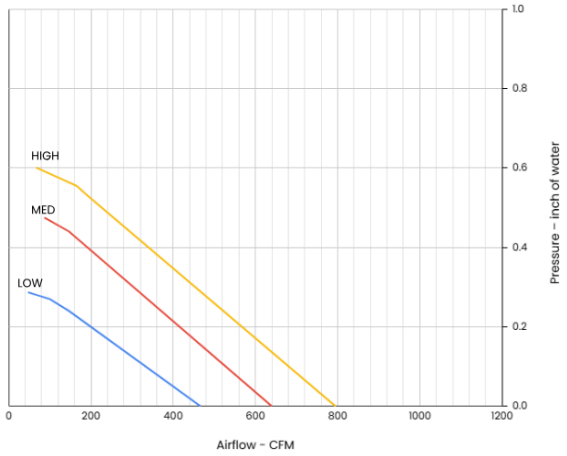

Figure 7. Outdoor fan performance curves

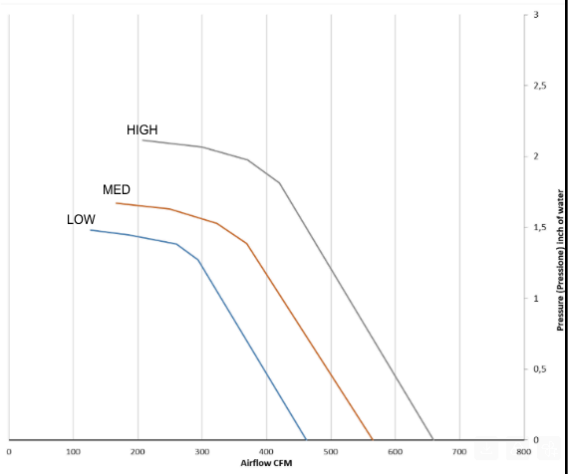

Figure 8. ERV fan performance curves

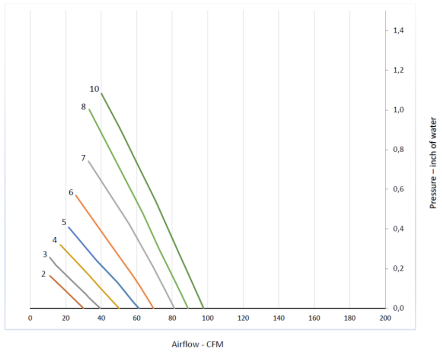

4. INSTALLATION

Figure 9.



Figure 10. Direct existing window vent



Figure 11. Direct external vent



Figure 12. Shared supply and exhaust vents

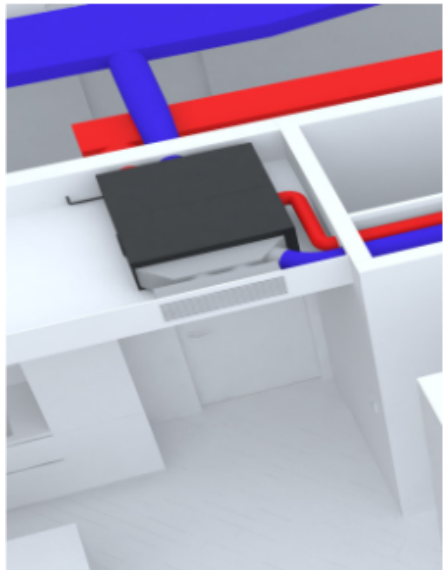

4.1 Air balancing requirements

- All units must be properly air balanced by a qualified, professional air balancing company.
- Air balancing must be performed after installation and prior to final commissioning.
- A formal air balancing report must be completed and made available.
- Failure to perform air balancing properly may result in improper performance, system issues, and voiding of the warranty.

4.2 Startup airflow commissioning

Units require startup airflow commissioning. Select the indoor/outdoor airflow program to match the installed duct configuration and external static pressure. Adjust ERV ventilation airflow during startup and verify airflow in the field. See the Installation Manual for detailed setup and measurement procedures.

4.3 Low ambient heating configuration requirement

To configure the unit for electric resistance heating in low ambient conditions (below 5°F/-15°C):

1. Turn on the unit.
2. Press and hold ☼ for 10 seconds until “Fh” appears on the display.
3. Press and hold ☼ for 5-10 seconds until “Fo” appears on the display.
4. Press and hold ☼ for 5-10 seconds until “rE” appears on the display.
5. Wait a few seconds (without pressing any buttons) to exit the menu.

rE = Resistance heat mode

This setting switches the unit to electric resistance heating during low ambient conditions, preventing heat pump operation that may contribute to ice formation.

4.4 Ambient temperature protection

When installed in climates with ambient temperatures below freezing, the unit must be located in an enclosed, temperature-protected indoor space that will not fall below 5°F (-15°C).

Secure any installation site insulation so that it cannot detach or be drawn into the unit’s air openings.

Failure to secure insulation may lead to unit damage and will void the warranty.

4.5 Site requirements

Refer to the installation manual for complete installation requirements and specifications.

- Where practical, avoid installing the unit in a location exposed to direct sunlight. Solar heating may cause the room-air temperature sensor to detect a temperature higher than the actual room temperature, resulting in improper temperature control, unnecessary cooling operation, reduced heating output, and decreased energy efficiency.
- A power supply circuit installed in accordance with the current edition of NEC (ANSI/NFPA 70) and local codes and ordinances.

- Always consult local and national electrical codes before installing the unit.
- Damage or premature failure of the quoted equipment resulting from improper voltage conditions, inadequate electrical service, or operating the equipment with excessive THD (Total Harmonic

Distortion) levels will void the Manufacturer's warranty.



Do not operate the unit in or near a construction or renovation site. Dust and debris can enter the unit, causing malfunctions and reduced performance.

- A power supply with a voltage rating of 60 Hz, single phase, in 115V or 208/230V in accordance with the model specified.
- All responsible parties must verify that the electrical supply is properly grounded, free of excessive electrical noise, and within the specified voltage and frequency limits before energizing the unit. Failure to correct power quality issues, including voltage instability or electrical noise, may result in equipment damage and will void the warranty for affected components.
- Interior clearances are as follows:
  - Sides of unit to wall: 3.5" (88.9 mm)
  - Bottom of unit to floor ⅓" (8.5 mm)
  - Top of unit to any obstruction: ⅓" (8.5 mm)
- Unblocked vents on the exterior and no obstacles within 36" (914.4 mm).
- An internal drain is highly recommended.
- If using an externally run condensate line, note the following:
  - The line must be properly insulated
  - The line must have a minimum slope of 30%.
  - If on a low floor, ensure that the end of the drain is above the maximum height of snow buildup.
- Approved louvers must be installed with best practices to ensure that no water enters the wall assembly.
- The unit is intended for ducted installation. Installation without ductwork may result in airflow performance issues.
- 8" diameter ducts through the wall, which protrude ⅛" (3.2 mm) into the unit's EPDM backing to ensure a tight seal.
- The unit must be perfectly level on the horizontal axis and perfectly plumb on the vertical axis.
- The unit must be attached to the ducts tightly, with zero leakage between the external ducts and the unit.

4.6 Outdoor air louver options

AIO® Ceiling Ducted units accommodate various outdoor air louver designs, including architectural louvers and perforated panels.

Choose one of the following options:

- Use an INNOVA-approved louver, available through your INNOVA distributor:
  - **Sunvent:** LLA/C, LLA/F, LLA/S
  - **Thermaduct:** RLA8
- Use a custom louver designed with guidance from INNOVA.



Contact INNOVA before selecting, designing, or fabricating a custom louver. An unsuitable louver may restrict airflow, impair unit operation, and affect warranty coverage.

4.7 Clearance requirements

The clearances for the AIO® Ceiling Ducted unit depend on how it is vented. Carefully read the criteria below to determine the correct clearance required.

- **Ceiling**
  There must be a 2" (50 mm) minimum clearance between the unit and the ceiling to minimize noise from vibrations.
- **Front**
  The clearance required in front of the unit to drywall or other material is 2" (50 mm) to minimize noise from vibrations.
- **Rear**
  There must be a 2" (50 mm) minimum clearance between the unit and the wall to minimize noise from vibrations. Ensure sufficient clearance to attach ductwork to the rear vents.

- **Sides**
  The clearance required on the sides is dependent on how the unit is configured for return and stale exhaust air. A 2" (50 mm) minimum clearance is required on each side to allow the air to flow into the returns, and to ensure easy access for installation and maintenance. Ensure sufficient clearance to attach ductwork to the rear vents.

Figure 13. Unit clearances

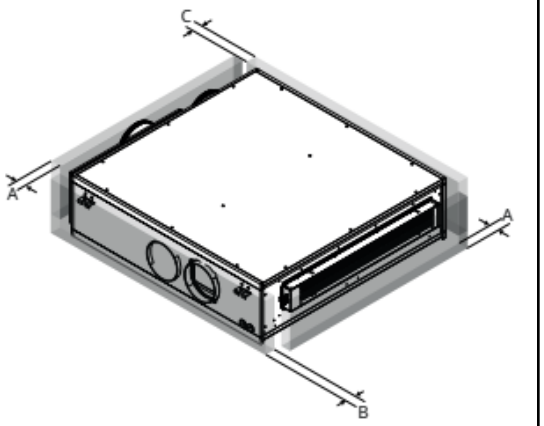

A	2" (50 mm)	**C**	2" (50 mm)
B	2" (50 mm)		

- **Bottom**
  There must be a minimum of 11.8" (300 mm) clearance between the unit and the false ceiling or access panel to minimize noise from vibrations.

Figure 14. Bottom clearance

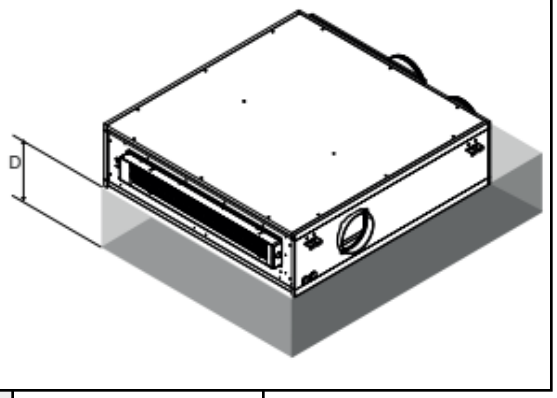

D	11.8" (300 mm)

- **Access Panel**
  There must be an access panel of at least the size of the unit plus 1/2 inch (12.7 mm) all around. The recommended size is 43.4" x 48.2" (1102 mm x 1224 mm). The minimum size is 41.9" x 46.7" (1064 mm x 1186 mm). You can use a return grill as an access panel or an access panel with an integrated return grille.

Figure 15. Access panel

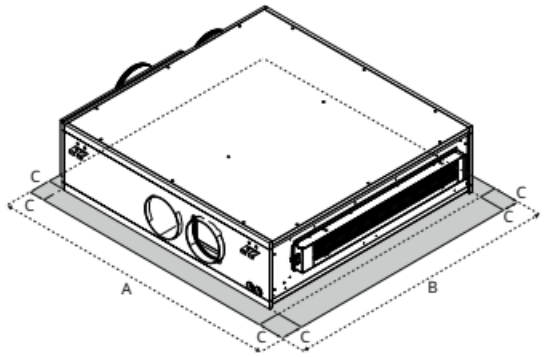

A	54.6" (1387 mm)	**C**	2" (50 mm)
B	44.6" (1133 mm)		

- **Exterior**
  On the exterior of the building, there should be no obstacles blocking the airflow from the louver. There must be at least 36" (915 mm) of free and clear space in front of the louvers.

5. TECHNICAL SPECIFICATIONS

5.1. High Performance

5.1.1 Cooling

Table 1. High Performance - Cooling

Heat Pump			95°F (35°C) (1)	105°F (40.6°C) (2)	115°F (46.1°C) (3)
Capacity	Maximum	BTU/hr	15,000	11,400	9,825
	Recommended*		9,400	8,200	7,300
	Rated		7,700	7,345	6,550
	Minimum		3,100	3,100	3,100
Input Power	Maximum	W	1,580	1,640	1,700
	Recommended*		960	950	1,040
	Rated		732	825	904
	Minimum		230	255	285
Efficiency	Maximum	EER	9.49	6.96	5.78
	Recommended*		9.79	8.63	7.00
	Rated	EER2	10.55	8.90	7.25
	Seasonal	SEER2	13.85	-	-
Moisture Removal		Pts/h	1.8	2.0	2.2
		L/hr	0.9	0.9	1.0

Notes

(1) ID: 80°F(26.7°C), W.B. 67°F(19.4°C) | OD: 95°F(35°C), W.B. 75°F(23.9°C)

(2) ID: 80°F(26.7°C), W.B. 67°F(19.4°C)| OD: 105°F(40.6°C), W.B. 75°F(23.9°C)

(3) ID: 80°F(26.7°C), W.B. 67°F(19.4°C) | OD: 115°F(46.1°C), W.B. 75°F(23.9°C)

* This is the recommended capacity for sizing the unit to the space.

5.1.2 Heating - Heat pump only

Table 2. High Performance - Heating

Heat Pump			47°F (8.3°C) (1)	17°F (-8.3°C) (2)	5°F (-15°C) (3)	0°F (-17.8°C) (4)	-5°F (-20.6°C) (5)
Capacity	Maximum	BTU/hr	14,000	10,000	6,600	6,300	5,800
	Recommended*		9,200	9,300	6,200	5,935	5,570
	Rated		8,600	8,300	6,200	5,935	5,570
	Minimum		3,500	3,300	2,800	2,500	3,300
Input Power	Maximum	W	1,420	1,460	1,700	1,600	1,650
	Recommended*		774	990	1,250	1,062	1,013
	Rated		693	860	1,086	1,062	1,013
	Minimum		315	420	440	430	480
Efficiency	Maximum	COP	2.89	2.01	1.13	1.14	1.04
	Recommended*		3.48	2.75	1.45	1.64	1.61
	Rated		3.64	2.83	1.68	1.64	1.61
	Minimum		3.26	2.30	1.87	1.70	2.01
	Seasonal	HSPF 2	9.15	-	-	-	-

Notes

(1) ID: 70°F(21.1°C), W.B. 60°F(15.6°C) | OD: 47°F(8.3°C), W.B. 43°F(6.1°C)

(2) ID: 70°F(21.1°C), W.B. 60°F(15.6°C) | OD: 17°F(-8.3°C), W.B. 15°F(-9.4°C)

(3) ID: 70°F(21.1°C), W.B. 60°F(15.6°C) | OD: 5°F(-15°C), W.B. 3°F(-16.1°C)

(4) ID: 70°F(21.1°C), W.B. 60°F(15.6°C) | OD: 0°F(-17.8°C)

(5) ID: 70°F(21.1°C), W.B. 60°F(15.6°C) | OD: -5°F(-20.6°C)

* This is the recommended capacity for sizing the unit to the space.

Optional heat strips are available for up to an additional 9,200 BTU/hr of heating capacity.

Unit performance decreases by approximately 3-4% per 1000 feet (305 meters) elevation above sea level.

5.2. Energy Star Compliant

5.2.1 Cooling

Table 3. Energy Star Compliant - Cooling

Heat Pump			95°F (35°C) (1)	105°F (40.6°C) (2)	115°F (46.1°C) (3)
Capacity	Maximum	BTU/hr	15,000	11,400	9,825
	Rated*		6,100	7,345	6,550
	Minimum		3,100	3,100	3,100
Input Power	Maximum	W	1,580	1,640	1,700
	Rated*		528	825	904
	Minimum		230	255	285
Efficiency	Maximum	EER	9.49	6.96	5.78
	Rated*	EER2	11.56	8.90	7.25
	Seasonal	SEER2	15.3	-	-
Moisture Removal		Pts/h	1.8	2.0	2.2
		L/hr	0.9	0.9	1.0

Notes

(1) ID: 80°F(26.7°C), W.B. 67°F(19.4°C) | OD: 95°F(35°C), W.B. 75°F(23.9°C)

(2) ID: 80°F(26.7°C), W.B. 67°F(19.4°C)| OD: 105°F(40.6°C), W.B. 75°F(23.9°C)

(3) ID: 80°F(26.7°C), W.B. 67°F(19.4°C) | OD: 115°F(46.1°C), W.B. 75°F(23.9°C)

* This capacity level is designed to meet Energy Star compliance requirements while supporting optimal energy performance.

5.2.2 Heating - Heat pump only

Table 4. Energy Star Compliant - Heating

Heat Pump			47°F (8.3°C) (1)	17°F (-8.3°C) (2)	5°F (-15°C) (3)	0°F (-17.8°C) (4)	-5°F (-20.6°C) (5)
Capacity	Maximum	BTU/hr	14,000	10,000	6,600	6,300	5,800
	Rated*		8,200	7,800	5,900	5,935	5,570
	Minimum		3,500	3,300	2,800	2,500	3,300
Input Power	Maximum	W	1,420	1,460	1,700	1,600	1,650
	Rated*		644	760	988	1,062	1,013
	Minimum		315	420	440	430	480
Efficiency	Maximum	COP	2.89	2.01	1.13	1.14	1.04
	Rated*		3.73	3.01	1.75	1.64	1.61
	Minimum		3.26	2.30	1.87	1.70	2.01
	Seasonal	HSPF 2	9.2	-	-	-	-

Notes

(1) ID: 70°F(21.1°C), W.B. 60°F(15.6°C) | OD: 47°F(8.3°C), W.B. 43°F(6.1°C)

(2) ID: 70°F(21.1°C), W.B. 60°F(15.6°C) | OD: 17°F(-8.3°C), W.B. 15°F(-9.4°C)

(3) ID: 70°F(21.1°C), W.B. 60°F(15.6°C) | OD: 5°F(-15°C), W.B. 3°F(-16.1°C)

(4) ID: 70°F(21.1°C), W.B. 60°F(15.6°C) | OD: 0°F(-17.8°C)

(5) ID: 70°F(21.1°C), W.B. 60°F(15.6°C) | OD: -5°F(-20.6°C)

* This capacity level is designed to meet Energy Star compliance requirements while supporting optimal energy performance.



Optional heat strips are available for up to an additional 9,200 BTU/hr of heating capacity.



Unit performance decreases by approximately 3-4% per 1000 feet (305 meters) elevation above sea level.

5.3. Airflow

5.3.1 Indoor

Table 5. Airflow - Indoor

Air volume		
Indoor	Type	ECM centrifugal
	CFM	226 - 400
	m^3/hr	384- 680
	Available ESP	0.6" WC (149.5 Pa)
	Supply connection	3.9" (99 mm) H x 29.1" (739 mm) W
	Return connection	Two 6" (152 mm) round on sides or bottom 8.7" (221 mm) x 22.1" (561 mm)
	Speeds	Low, med, high, boost, auto
	Filter	MERV 3

Figure 16. MERV Filter Pressure Drop

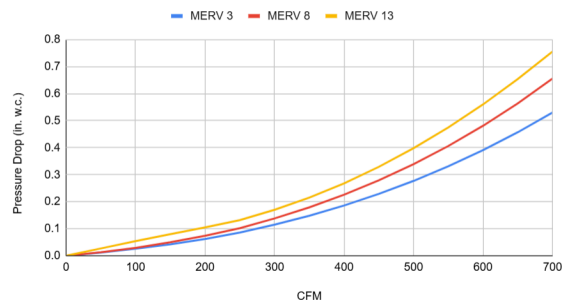

5.3.2 Outdoor

Table 6. Airflow - outdoor

Air volume		
Outdoor	Type	ECM centrifugal
	CFM Range	385 - 638
	m^3/hr Range	654- 1084
	Nominal CFM	400
	Nominal m^3/hr	680
	Available ESP at Nominal	0.7" WC (174.4 Pa)
	Intake and Exhaust Connection	8" (203 mm) round
	Speeds	Low, med, high, auto

5.4. Sound

Table 7. Sound

Sound			
Indoor	1 m	Level 1 - Low - LpA dB(A)	38
		Level 2 - Medium - LpA dB(A)	48
		Level 3 - High - LpA dB(A)	49
	3 m	Level 1 - Low - LpA dB(A)	30
		Level 2 - Medium - LpA dB(A)	40
		Level 3 - High - LpA dB(A)	41
Outdoor		dB(A)	28 - 55

5.5 ERV

Table 8. ERV

General		
Flow type	Counterflow enthalpy exchanger	
Material	Mold and bacteria-resistant, washable polymer membrane	
ASHRAE compliance	62.1 and 62.2 when used with the ERV module	
Flow	CFM	10-80
	m^3h	17-136

Table 9. ERV

	40 CFM	60 CFM	80 CFM
	(68 m^3/hr)	(102 m^3/hr)	(136 m^3/hr)
Efficiency of core in winter	Sensible	81.45%	77.7%	74%
	Latent	81.39%	54.2%	50.4%
Efficiency of core in summer	Sensible	80.64%	76.61%	72.6%
	Latent	80.96%	53.4%	49.32%
Filter	Indoor air	MERV 3 / optional MERV 13		
	Outside air	MERV 13	MERV 13	MERV 13
Leakage	Internal	2.6% at 0.40" WC (99.6 Pa)	2.4% at 0.40" WC (99.6 Pa)	2.2% at 0.40" WC (99.6 Pa)
	External	2.8% at 1.0" WC (249.1 Pa)	2.7% at 1.0" WC (249.1 Pa)	2.5% at 1.0" WC (249.1 Pa)

5.6 General

5.6.1 Controls

Table 10. Controls

Controls	
Basic functionality	Dependent on the controller
WiFi	Optional module available
Dry contact	Yes
Power outage restart	Auto-on based on the last setting

5.6.2 Modes

Table 11. Modes

Modes	
Operation	Cool+ fresh air, cool only, heat+ fresh air, heat only, auto
Restricted modes	Heat only, cool only, temperature limiting
Timers	Dependent on the controller

5.6.3 Condensate

Table 12. Condensate

Condensate	
Pipe size	3/4" (19 mm) outside diameter
Pipe material	Rubber

5.6.4 Compressor

Table 13. Compressor

Compressor			
Type	BLDC twin rotary inverter		
Refrigerant	For R-32 Units	Refrigerant Type	R-32
		Charge	16.93 oz.
			480 g
Oil Type	Fv50s (ISO 50) Polyvinylether (PVE)		

5.6.5 Physical

For detailed dimensions, refer to the drawings in Section 8.

Table 14. Physical data

Physical data			
Dimensions		in	42.6 W x 52.6 D x 11.3 H
		mm	1081 W x 1335 D x 286 H
Weight	Net	lb	178
		kg	80.7
	Gross	lb	190
		kg	86.1
Cabinet	Finish		Black covered with dark gray EPDM
	Material		Steel

5.6.6 Insulation

Table 15. General - Insulation

Thermal conductivity at 50°F	0.239 BTU*in/(hr·ft²·°F)
Thermal conductivity at 10°C	0.0344 W/(m·K)

Insulation R-value is determined by dividing the insulation thickness by the thermal conductivity (k-value). Insulation thickness varies by component and configuration.

5.7. Electrical

5.7.1 General

Table 16. Electrical - General

General		115V	230V
Volt range		103 - 127	180-253
Hz/phase		60 Hz / single phase	
Power input connection		Hardwire	
Power factor		0.96	
Input power (standby)	W	10.8	
Input power (off mode)	W	1.5	
Heat Pump Only			
Cooling +ERV (nominal)	A	8.2	4.1
Cooling - heat pump + ERV (max)	A	20.9	9.5
Heating - heat pump +ERV (nom.)	A	10.0	5.0
Heating-heat pump + ERV (max)	A	20.9	9.5
Heat Pump + 900 W Elec Heater			
Maximum	A	29.1	-
Heat Pump + 1,800 W Elec Heater			
Maximum	A	-	17.3
Heat Pump + 2,700 W Elec Heater			
Maximum	A	-	21.2
Heat Pump + 1,800 W Electric Heater + 1 kW Preheater			
Maximum	A	-	21.7
Heat Pump + 2,700 W Electric Heater + 1 kW Preheater			
Maximum	A	-	25.6

5.7.2 Motors

Table 17. Electrical - Compressor

Motors			115V	208V	230V	240V
Compressor	RLA	A	13.0	6.63	6.0	5.75
	LRA		13.0	6.63	6.0	7.75
Indoor ECM fan motor	Watts (max)	W	260	200	200	200
	FLA	A	3.4	1.33	1.2	1.15
	Power	HP	0.125	0.10	0.10	0.10
Outdoor ECM fan motor - heat pump + ERV	Watts (max)	W	150	150	150	150
	FLA	A	2.1	1.16	1.05	1.01
	Power	HP	0.10	0.10	0.10	0.10
Outdoor ECM fan motor - heat pump + heater + ERV	Watts (max)	W	150	120	150	120
	FLA	A	2.1	1.00	1.05	0.86
	Power	HP	0.10	0.10	0.10	0.10

Table 18. Electrical - Circuit breakers

Circuit breakers			115V	208V	230V	240V
Heat Pump + ERV	MCA	A	25	13	11	11
	MOCP		35	15	15	15
Heat Pump + 900W Elec Heat + ERV	MCA	A	33	-	-	-
	MOCP		45	-	-	-
Heat Pump + 1800W Elec Heat + ERV	MCA	A	-	20	19	19
	MOCP		-	25	20	20
Heat Pump + 2700W Elec Heat + ERV	MCA	A	-	23	23	24
	MOCP		-	25	25	25
Heat Pump + 1800W Elec Heat + 1 kW Preheat + ERV	MCA	A	-	24	24	24
	MOCP		-	25	25	25
Heat Pump + 2700W Elec Heat + 1 kW Preheat + ERV	MCA	A	-	27	28	28
	MOCP		-	30	30	30

5.7.3 Heater Output (W) and Heater Current (A) vs. Supply Voltage

Table 19. Heater Output (W) and Heater Current (A) vs. Supply Voltage

Volt/Watt	1000W	900W	1800W	2700W
115V	N/a	900W / 7.8A	N/A	N/A
208V	818W / 3.9A	736W / 3.5A	1472W / 7.1A	2200W / 10.6A
230V	1000W / 4.3A	900W / 3.9A	1800W / 7.8A	2700W / 11.7A
240V	1089W / 4.5A	980W / 4.1A	1960W / 8.2A	3000W / 12.5A

6. LOGIC

6.1 Backup electric heat

The backup electric heater function provides emergency heating while in heating mode if the heat pump becomes unavailable due to a compressor or heat pump alarm. If the heaters are already active, they continue operation; otherwise, the system enables them automatically. Once the alarm condition is cleared and the compressor restarts, the unit returns to normal heat pump operation. This function is only available on units equipped with the optional post-heater.

6.2 ERV defrost timer

The ERV defrost timer function is designed to prevent the ERV core from freezing during very cold outdoor conditions. During operation, the exhaust fan runs continuously, while the fresh air fan operates intermittently based on the outdoor air temperature measured after the preheater. As the temperature decreases, the fresh air fan cycles off for short periods to reduce frost buildup within the ERV core. At 23°F (-5°C), the fan operates 50 minutes on and 10 minutes off; at 14°F (-10°C), 30 minutes on and 10 minutes off; at -4°F (-20°C), 20 minutes on and 10 minutes off.

6.3 ERV preheater

The ERV preheater is designed to preheat incoming fresh air during heating operation to maintain a stable supply air temperature. The heater output is regulated to maintain a constant temperature setpoint of 26.6°F (-3°C). The preheater operates only when the ERV fan is running and is automatically disabled if the temperature probe enters an alarm condition. This function is only available on units equipped with the optional ERV preheater.

6.4 Post heater

The post-heater operates during heating and dehumidification modes to maintain a stable supply air temperature. The heater output is regulated to maintain the target temperature setpoint. Separate temperature setpoints are available for heating and dehumidification modes. These functions are only available on units equipped with the optional post-heater.

6.4.1 Post-heater modes

When the unit is equipped with the optional post-heater, different modes of operation are available.

FH Mode

In this mode, the post-heater operates together with the heat pump when additional heating is required. The post-heater activates when the compressor has been running for at least 20 minutes and the room temperature is still at least 3.6°F (2°C) below the setpoint. If the room temperature rises 1.8°F (1°C) above the setpoint, both the heat pump and post-heater shut off. When the room temperature drops 1.8°F (1°C) below the setpoint, the heat pump restarts and checks the above conditions to determine whether the post-heater should activate.

rE Mode

In this mode, the post-heater is activated to work with the heat pump when all of the following conditions are met:

- The compressor has been running for 30 seconds
- The room temperature is below 75.2°F (24°C)
- The room temperature is at least 3.6°F (2°C) below the setpoint
- The indoor coil temperature is below 111.2°F (44°C)
- The indoor fan motor is on and running at a stable speed
- No room temperature sensor or indoor coil sensor alarms are active

Heating is shut off when any of the following conditions occur:

- The indoor coil temperature exceeds 116.6°F (47°C)
- The room temperature exceeds the setpoint
- The room temperature exceeds 77°F (25°C)
- The internal fan stops or fails
- The compressor shuts down

If night mode is enabled or if the outdoor temperature is below -4°F (20°C), the heat pump is disabled and all heating is provided exclusively by the post-heater. The post-heater turns on when the room temperature is 1.8°F (1°C) below the setpoint, the room temperature is below 80.6°F (27°C), and no alarms are present for the room temperature sensor, indoor coil sensor, or indoor fan motor. The post-heater shuts off when the room temperature rises 1.8°F (1°C) above the setpoint, the room temperature rises above 82.4°F (28°C), or the indoor fan motor stops or fails.

6.5 Dehumidification

During dehumidification, the system operates the compressor and indoor fan in cooling mode while an electric post-heater reheats the supply air to maintain a stable discharge air temperature. Dehumidification activates when the relative humidity exceeds the setpoint by more than 7% and deactivates once the humidity returns to the setpoint. During operation, the post-heater maintains a target supply air temperature, typically fixed at 71.6°F (22°C). Dehumidification is disabled during heating and cooling mode operation, or when the room temperature falls below 50°F (10°C). This function is only available on units equipped with the optional post-heater.

7. WIRING DIAGRAM

To view the diagram as a high-resolution PDF, click the link below:

AIO Ceiling Ducted-Ceiling Suspended-Vertical S...

Figure 17. Wiring Diagram

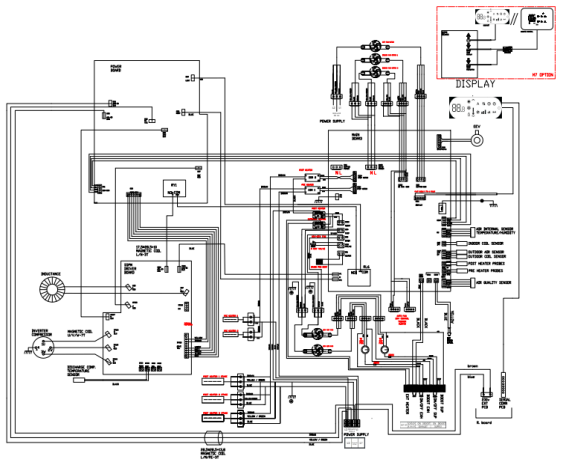

8. DIMENSIONS

To view the dimensions of the AIO® Ceiling Ducted unit as a high-resolution PDF, click the link below:

AIO Ceiling Ducted (Gen 4) Dimensions.pdf

Figure 18. Ceiling Ducted Unit

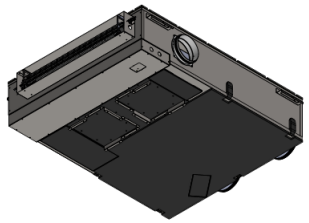

Figure 19. Ceiling Ducted Unit Dimensions (Top View)

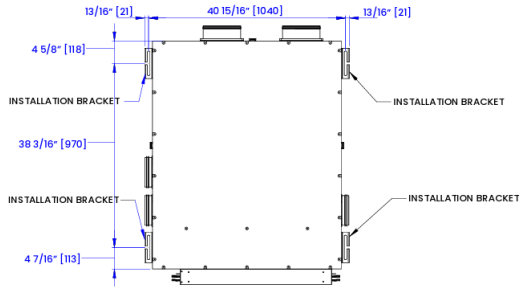

Figure 20. Ceiling Ducted Unit Dimensions (Left View)

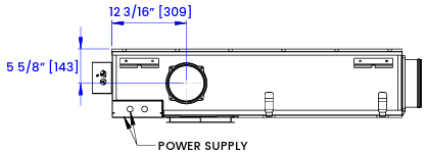

Figure 21. Ceiling Ducted Unit Dimensions (Front View)

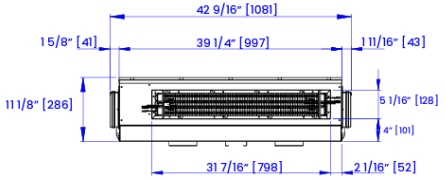

Figure 22. Ceiling Ducted Unit Dimensions (Right View)

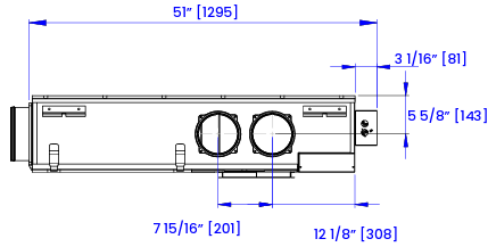

Figure 23. Ceiling Ducted Unit Dimensions (Bottom View)

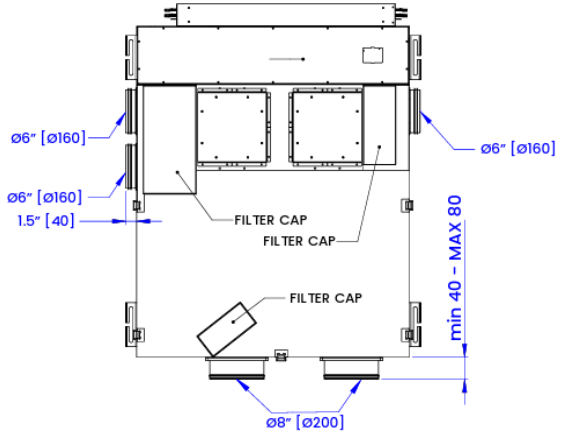

Figure 24. Ceiling Ducted Unit Dimensions (Rear View)

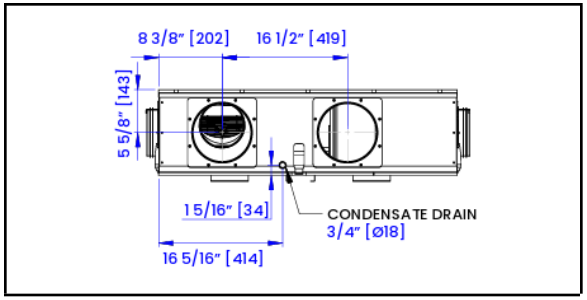

9. WARRANTY

9.1 Basic coverage

- **Parts:** 5 years from delivery.
- **Compressor:** 10 years from delivery.
- **Labor:** 2 years from certification (only if at least 10 units are installed, the site is certified by INNOVA or self-certified, and spare stock equal to 3% of total units is maintained)
- **Controllers:** Covered under a 2-year warranty.

9.2 Optional extended coverage

- **Additional 2-Year Parts & Labor Warranty:** Extends the basic coverage to 4 years labor and 7 years parts.
- **Extended 10-Year Parts Warranty:** Extends parts coverage to 10 years total.
- **Extended 5-Year Full Warranty:** Extends full parts and labor coverage to 5 years total.
- **Extended 10-Year Full Warranty:** Provides a 10-year full warranty on parts, labor, and compressor.
- **Extended 15-Year Full Warranty:** Provides a 15-year full warranty on parts, labor, and compressor.

9.3 Validation requirements

- Installation must be certified by an INNOVA technician or self-certified within 30 days.
- Installers must complete INNOVA training.
- The system must comply with local codes, use approved louvers, and be properly maintained (e.g., clean filters monthly, coils every 18 months).

For warranty service or claims, contact INNOVA Support at VIP@innova.co or (212) 204-2700.

For detailed terms and conditions, click the link below:

AIO Warranty Terms and Conditions - 2026 - INN...

10. SUBMITTALS

10.1 115V Heat Pump + ERV - High Performance

AIO® CEILING DUCTED - 115V NO ELECTRIC HEAT - ERV - R32 - SUBMITTAL (ADP10R3H1)

Job	Reference	Construction
Location	Approval	Quote Number
Engineer	Date	Drawing Number
Submitted To	Submitted By:	P.O. Number:

General Features

- BLDC inverter compressor
- ECM fans
- Integrated ERV
- Field configured 900W electric heat supplement
- Bathroom exhaust connection
- MERV 13 filters on fresh air
- R32 Refrigerant
- Auto restart
- Intelligent defrost
- No outdoor unit
- Onboard touch controller
- Washable filter
- 3 selectable fan speeds + Auto
- 10-Year limited warranty (after certification)
- Made in Italy

The installing contractor must contact INNOVA Customer Technical prior to installation to schedule an installation training overview.

This may be conducted in person or remotely (online). It is the official installation training and may include videos, best practices, and system requirements.

Performing installations without training may result in installation errors, performance issues, and possible warranty limitations.

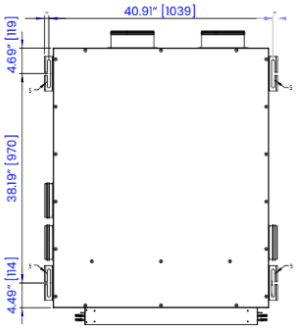

Performance Specifications			
Cooling	Min-Max	BTU/H	3,100 - 15,000
	Rated capacity (95°F)		7,700
	Efficiency	EER2	10.55
Heating	Min-Max	BTU/H	3,500 - 14,000
	Rated capacity (47°F)		8,600
	Rated capacity (5°F)		6,200
	Efficiency	COP	3.64
Sound	Indoor: Low-High at 1 m distance	db(A)	38 - 49
	Indoor: Low-High at 3 m distance		30 - 41
	Outdoor sound range		28 - 55
Moisture removal	Moisture removal	Pts/h	1.8
		L/hr	0.9
Airflow	Indoor	CFM	226 - 400
		m^3/hr	384 - 680
	Outdoor	CFM	385 - 638
		m^3/hr	654 - 1084

Electric Specifications	
Power Supply	115V/1Ph/60Hz
Voltage Range	103-127
Running Amps Cooling	8.2
Running Amps Heating	10.0
MCA	25
Maximum Overcurrent Protection (A)	35
Max Power Input (amps) Cooling	20.9
Max Power Input (amps) Heating	20.9

Included	Wall Controllers + Gateways	
☐	Wireless Remote	WRCH20
☐	Basic Touch Controller	LTCH20
☐	Recessed Touch Controller	RTCH20
☐	Advanced TFT Controller with 7-Day program	TFTH20
☐	Wireless (AA Battery) Infrared Controller with 7-Day program	WIPT20
☐	Third Party Gateway	TPG015
☐	WiFi App	WIFI30
☐	E-Paper EOS Controller	EEOS12
☐	Simple EOS Controller	SEOS12
☐	Integration gateway for LTCH20, TFTH20 and MODBUS	GWN
☐	Integration gateway for LTCH20, TFTH20, MODBUS, BACnet, and third-party thermostats	GWX

10.2 115V Heat Pump + Elec Heat + ERV - High Performance

AIO® CEILING DUCTED - 115V + 900 W ELEC. HEAT + ERV - R32 - SUBMITTAL (ADE10R3H1)

Job	Reference	Construction
Location	Approval	Quote Number
Engineer	Date	Drawing Number
Submitted To	Submitted By:	P.O. Number:

General Features

- BLDC inverter compressor
- ECM fans
- Integrated ERV
- Field configured 900W electric heat supplement
- Bathroom exhaust connection
- MERV 13 filters on fresh air
- R32 Refrigerant
- Auto restart
- Intelligent defrost
- No outdoor unit
- Onboard touch controller
- Washable filter
- 3 selectable fan speeds + Auto
- 10-Year limited warranty (after certification)
- Made in Italy

The installing contractor must contact INNOVA Customer Technical Support prior to installation to schedule an installation training overview.

This may be conducted in person or remotely (online) It is the official installation training and may include videos, best practices, and system requirements.

Performing installations without training may result in installation errors, performance issues, and possible warranty limitations.

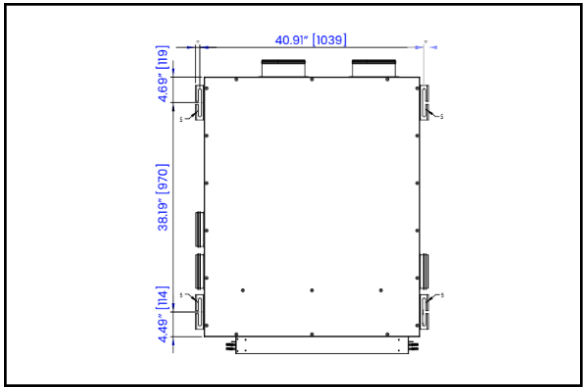

Performance Specifications			
Cooling	Min-Max	BTU/H	3,100 - 15,000
	Rated capacity (95°F)		7,700
	Efficiency	EER2	10.55
Heating	Min-Max	BTU/H	3,500 - 14,000
	Rated capacity (47°F)		8,600
	Rated capacity (5°F)		6,200
	Efficiency	COP	3.64
Sound	Indoor: Low-High at 1 m distance	db(A)	38 - 49
	Indoor: Low-High at 3 m distance		30 - 41
	Outdoor sound range		28 - 55
Moisture removal	Moisture removal	Pts/h	1.8
		L/hr	0.9
Airflow	Indoor	CFM	226 - 400
		m^3/hr	384 - 680
	Outdoor	CFM	385 - 638
		m^3/hr	654 - 1084

Electric Specifications	
Power Supply	115V/1Ph/60Hz
Voltage Range	103-127
Running Amps Cooling	8.2
Running Amps Heating	10.0
MCA	33
Maximum Overcurrent Protection (A)	45
Max Power Input (amps) Cooling	20.9
Max Power Input (amps) Heating	29.1

Included	Wall Controllers + Gateways	
☐	Wireless Remote	WRCH20
☐	Basic Touch Controller	LTCH20
☐	Recessed Touch Controller	RTCH20
☐	Advanced TFT Controller with 7-Day program	TFTH20
☐	Wireless (AA Battery) Infrared Controller with 7-Day program	WIPT20
☐	Third Party Gateway	TPG015
☐	WiFi App	WIFI30
☐	E-Paper EOS Controller	EEOS12
☐	Simple EOS Controller	SEOS12
☐	Integration gateway for LTCH20, TFTH20 and MODBUS	GWN
☐	Integration gateway for LTCH20, TFTH20, MODBUS, BACnet, and third-party thermostats	GWX

10.3 230V Heat Pump + ERV - High Performance

AIO® CEILING DUCTED - 230V - NO ELECTRIC HEAT - ERV - R32 - SUBMITTAL (ADP10R3H2)

Job	Reference	Construction
Location	Approval	Quote Number
Engineer	Date	Drawing Number
Submitted To	Submitted By:	P.O. Number:

General Features

- BLDC inverter compressor
- ECM fans
- Integrated ERV
- Field configured 900W or 1,800W electric heat supplement
- Bathroom exhaust connection
- MERV 13 filters on fresh air
- R32 Refrigerant
- Auto restart
- Intelligent defrost
- No outdoor unit
- Onboard touch controller
- Washable filter
- 3 selectable fan speeds + Auto
- 10-Year limited warranty (after certification)
- Made in Italy

The installing contractor must contact INNOVA Customer Technical Support prior to installation to schedule an installation training overview.

This may be conducted in person or remotely (online) It is the official installation training and may include videos, best practices, and system requirements.

Performing installations without training may result in installation errors, performance issues, and possible warranty limitations.

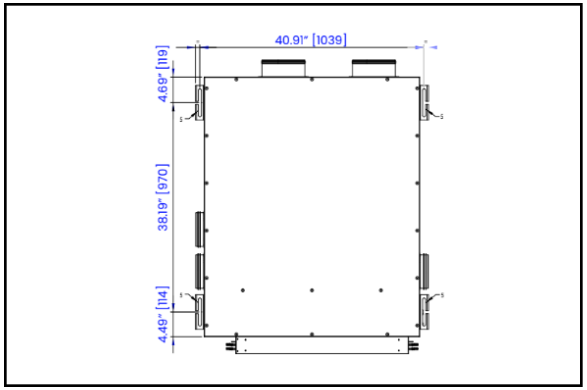

Performance Specifications			
Cooling	Min-Max	BTU/H	3,100 - 15,000
	Rated capacity (95°F)		7,700
	Efficiency	EER2	10.55
Heating	Min-Max	BTU/H	3,500 - 14,000
	Rated capacity (47°F)		8,600
	Rated capacity (5°F)		6,200
	Efficiency	COP	3.64
Sound	Indoor: Low-High at 1 m distance	db(A)	38 - 49
	Indoor: Low-High at 3 m distance		30 - 41
	Outdoor sound range		28 - 55
Moisture removal	Moisture removal	Pts/h	1.8
		L/hr	0.9
Airflow	Indoor	CFM	226 - 400
		m^3/hr	384 - 680
	Outdoor	CFM	385 - 638
		m^3/hr	654 - 1084

Electric Specifications	
Power Supply	230V/1Ph/60Hz
Voltage Range	180-253
Running Amps Cooling	4.1
Running Amps Heating	5.0
MCA	11
Maximum Overcurrent Protection (A)	15
Max Power Input (amps) Cooling	9.5
Max Power Input (amps) Heating	9.5

Included	Wall Controllers + Gateways	
☐	Wireless Remote	WRCH20
☐	Basic Touch Controller	LTCH20
☐	Recessed Touch Controller	RTCH20
☐	Advanced TFT Controller with 7-Day program	TFTH20
☐	Wireless (AA Battery) Infrared Controller with 7-Day program	WIPT20
☐	Third Party Gateway	TPG015
☐	WiFi App	WIFI30
☐	E-Paper EOS Controller	EEOS12
☐	Simple EOS Controller	SEOS12
☐	Integration gateway for LTCH20, TFTH20 and MODBUS	GWN
☐	Integration gateway for LTCH20, TFTH20, MODBUS, BACnet, and third-party thermostats	GWX

10.4 230V Heat Pump + 1,800W Elec Heat + ERV - High Performance

AIO® CEILING DUCTED - 230V - 1,800W ELEC. HEAT + ERV - R32 - SUBMITTAL (ADK10R3H2)

Job	Reference	Construction
Location	Approval	Quote Number
Engineer	Date	Drawing Number
Submitted To	Submitted By:	P.O. Number:

General Features

- BLDC inverter compressor
- ECM fans
- Integrated ERV
- Field configured 900W or 1,800W electric heat supplement
- Bathroom exhaust connection
- MERV 13 filters on fresh air
- R32 Refrigerant
- Auto restart
- Intelligent defrost
- No outdoor unit
- Onboard touch controller
- Washable filter
- 3 selectable fan speeds + Auto
- 10-Year limited warranty (after certification)
- Made in Italy

The installing contractor must contact INNOVA Customer Technical Support prior to installation to schedule an installation training overview.

This may be conducted in person or remotely (online) It is the official installation training and may include videos, best practices, and system requirements.

Performing installations without training may result in installation errors, performance issues, and possible warranty limitations.

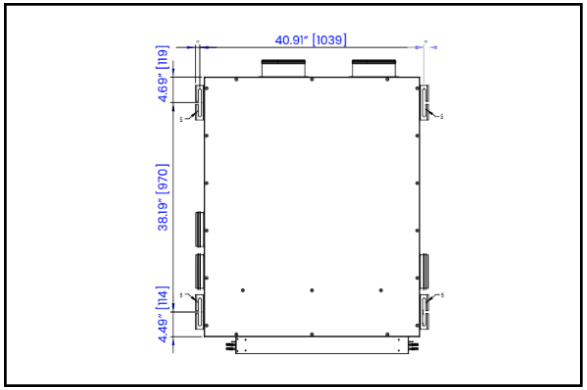

Performance Specifications			
Cooling	Min-Max	BTU/H	3,100 - 15,000
	Rated capacity (95°F)		7,700
	Efficiency	EER2	10.55
Heating	Min-Max	BTU/H	3,500 - 14,000
	Rated capacity (47°F)		8,600
	Rated capacity (5°F)		6,200
	Efficiency	COP	3.64
Sound	Indoor: Low-High at 1 m distance	db(A)	38 - 49
	Indoor: Low-High at 3 m distance		30 - 41
	Outdoor sound range		28 - 55
Moisture removal	Moisture removal	Pts/h	1.8
		L/hr	0.9
Airflow	Indoor	CFM	226 - 400
		m^3/hr	384 - 680
	Outdoor	CFM	385 - 638
		m^3/hr	654 - 1084

Electric Specifications	
Power Supply	230V/1Ph/60Hz
Voltage Range	180-253
Running Amps Cooling	4.1
Running Amps Heating	5.0
MCA	19
Maximum Overcurrent Protection (A)	20
Max Power Input (amps) Cooling	9.5
Max Power Input (amps) Heating	17.3

Included	Wall Controllers + Gateways	
☐	Wireless Remote	WRCH20
☐	Basic Touch Controller	LTCH20
☐	Recessed Touch Controller	RTCH20
☐	Advanced TFT Controller with 7-Day program	TFTH20
☐	Wireless (AA Battery) Infrared Controller with 7-Day program	WIPT20
☐	Third Party Gateway	TPG015
☐	WiFi App	WIFI30
☐	E-Paper EOS Controller	EEOS12
☐	Simple EOS Controller	SEOS12
☐	Integration gateway for LTCH20, TFTH20 and MODBUS	GWN
☐	Integration gateway for LTCH20, TFTH20, MODBUS, BACnet, and third-party thermostats	GWX

10.5 230V Heat Pump + 2,700W Elec Heat + ERV - High Performance

AIO® CEILING DUCTED - 230V - 2,700W ELEC. HEAT + ERV - R32 - SUBMITTAL (ADL10R3H2)

Job	Reference	Construction
Location	Approval	Quote Number
Engineer	Date	Drawing Number
Submitted To	Submitted By:	P.O. Number:

General Features

- BLDC inverter compressor
- ECM fans
- Integrated ERV
- Field configured 900W, 1,800W or 2,700W electric heat supplement
- Bathroom exhaust connection
- MERV 13 filters on fresh air
- R32 Refrigerant
- Auto restart
- Intelligent defrost
- No outdoor unit
- Onboard touch controller
- Washable filter
- 3 selectable fan speeds + Auto
- 10-Year limited warranty (after certification)
- Made in Italy

The installing contractor must contact INNOVA Customer Technical Support prior to installation to schedule an installation training overview.

This may be conducted in person or remotely (online) It is the official installation training and may include videos, best practices, and system requirements.

Performing installations without training may result in installation errors, performance issues, and possible warranty limitations.

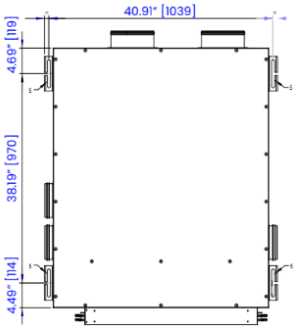

Performance Specifications			
Cooling	Min-Max	BTU/H	3,100 - 15,000
	Rated capacity (95°F)		7,700
	Efficiency	EER2	10.55
Heating	Min-Max	BTU/H	3,500 - 14,000
	Rated capacity (47°F)		8,600
	Rated capacity (5°F)		6,200
	Efficiency	COP	3.64
Sound	Indoor: Low-High at 1 m distance	db(A)	38 - 49
	Indoor: Low-High at 3 m distance		30 - 41
	Outdoor sound range		28 - 55
Moisture removal	Moisture removal	Pts/h	1.8
		L/hr	0.9
Airflow	Indoor	CFM	226 - 400
		m^3/hr	384 - 680
	Outdoor	CFM	385 - 638
		m^3/hr	654 - 1084

Electric Specifications	
Power Supply	230V/1Ph/60Hz
Voltage Range	180-253
Running Amps Cooling	4.1
Running Amps Heating	5.0
MCA	23
Maximum Overcurrent Protection (A)	25
Max Power Input (amps) Cooling	9.5
Max Power Input (amps) Heating	21.2

Included	Wall Controllers + Gateways	
☐	Wireless Remote	WRCH20
☐	Basic Touch Controller	LTCH20
☐	Recessed Touch Controller	RTCH20
☐	Advanced TFT Controller with 7-Day program	TFTH20
☐	Wireless (AA Battery) Infrared Controller with 7-Day program	WIPT20
☐	Third Party Gateway	TPG015
☐	WiFi App	WIFI30
☐	E-Paper EOS Controller	EEOS12
☐	Simple EOS Controller	SEOS12
☐	Integration gateway for LTCH20, TFTH20 and MODBUS	GWN
☐	Integration gateway for LTCH20, TFTH20, MODBUS, BACnet, and third-party thermostats	GWX

10.6 230V Heat Pump + 1kW Preheat + ERV - High Performance

AIO® CEILING DUCTED - 230V - 1kW PREHEAT + ERV - R32 - SUBMITTAL (ADH10R3H2)

Job	Reference	Construction
Location	Approval	Quote Number
Engineer	Date	Drawing Number
Submitted To	Submitted By:	P.O. Number:

General Features

- BLDC inverter compressor
- ECM fans
- Integrated ERV
- Field configured 1kW preheat supplement
- Bathroom exhaust connection
- MERV 13 filters on fresh air
- R32 Refrigerant
- Auto restart
- Intelligent defrost
- No outdoor unit
- Onboard touch controller
- Washable filter
- 3 selectable fan speeds + Auto
- 10-Year limited warranty (after certification)
- Made in Italy

The installing contractor must contact INNOVA Customer Technical Support prior to installation to schedule an installation training overview.

This may be conducted in person or remotely (online) It is the official installation training and may include videos, best practices, and system requirements.

Performing installations without training may result in installation errors, performance issues, and possible warranty limitations.

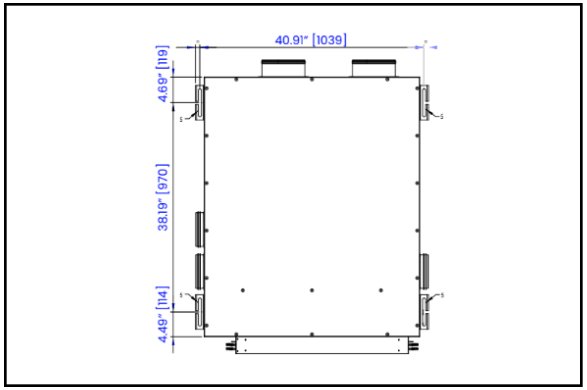

Performance Specifications			
Cooling	Min-Max	BTU/H	3,100 - 15,000
	Rated capacity (95°F)		7,700
	Efficiency	EER2	10.55
Heating	Min-Max	BTU/H	3,500 - 14,000
	Rated capacity (47°F)		8,600
	Rated capacity (5°F)		6,200
	Efficiency	COP	3.64
Sound	Indoor: Low-High at 1 m distance	db(A)	38 - 49
	Indoor: Low-High at 3 m distance		30 - 41
	Outdoor sound range		28 - 55
Moisture removal	Moisture removal	Pts/h	1.8
		L/hr	0.9
Airflow	Indoor	CFM	226 - 400
		m^3/hr	384 - 680
	Outdoor	CFM	385 - 638
		m^3/hr	654 - 1084

Electric Specifications	
Power Supply	230V/1Ph/60Hz
Voltage Range	180-253
Running Amps Cooling	4.1
Running Amps Heating	5.0
MCA	15
Maximum Overcurrent Protection (A)	20
Max Power Input (amps) Cooling	9.5
Max Power Input (amps) Heating	13.8

Included	Wall Controllers + Gateways	
☐	Wireless Remote	WRCH20
☐	Basic Touch Controller	LTCH20
☐	Recessed Touch Controller	RTCH20
☐	Advanced TFT Controller with 7-Day program	TFTH20
☐	Wireless (AA Battery) Infrared Controller with 7-Day program	WIPT20
☐	Third Party Gateway	TPG015
☐	WiFi App	WIFI30
☐	E-Paper EOS Controller	EEOS12
☐	Simple EOS Controller	SEOS12
☐	Integration gateway for LTCH20, TFTH20 and MODBUS	GWN
☐	Integration gateway for LTCH20, TFTH20, MODBUS, BACnet, and third-party thermostats	GWX

10.7 230V Heat Pump + 1,800W Elec Heat + 1kW Preheat + ERV - High Performance

AIO® CEILING DUCTED - 230V - 1,800W ELEC. HEAT+ 1kW PREHEAT + ERV - R32 - SUBMITTAL (ADU10R3H2)

Job	Reference	Construction
Location	Approval	Quote Number
Engineer	Date	Drawing Number
Submitted To	Submitted By:	P.O. Number:

General Features

- BLDC inverter compressor
- ECM fans
- Integrated ERV
- Field configured 900W or 1,800W electric heat supplement
- Field configured 1kW preheat
- Bathroom exhaust connection
- MERV 13 filters on fresh air
- R32 Refrigerant
- Auto restart
- Intelligent defrost
- No outdoor unit
- Onboard touch controller
- Washable filter
- 3 selectable fan speeds + Auto
- 10-Year limited warranty (after certification)
- Made in Italy

The installing contractor must contact INNOVA Customer Technical Support prior to installation to schedule an installation training overview.

This may be conducted in person or remotely (online) It is the official installation training and may include videos, best practices, and system requirements.

Performing installations without training may result in installation errors, performance issues, and possible warranty limitations.

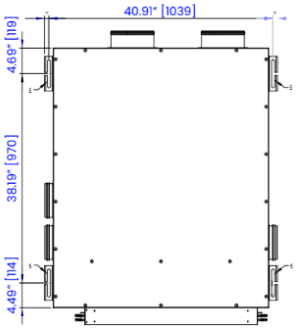

Performance Specifications			
Cooling	Min-Max	BTU/H	3,100 - 15,000
	Rated capacity (95°F)		7,700
	Efficiency	EER2	10.55
Heating	Min-Max	BTU/H	3,500 - 14,000
	Rated capacity (47°F)		8,600
	Rated capacity (5°F)		6,200
	Efficiency	COP	3.64
Sound	Indoor: Low-High at 1 m distance	db(A)	38 - 49
	Indoor: Low-High at 3 m distance		30 - 41
	Outdoor sound range		28 - 55
Moisture removal	Moisture removal	Pts/h	1.8
		L/hr	0.9
Airflow	Indoor	CFM	226 - 400
		m^3/hr	384 - 680
	Outdoor	CFM	385 - 638
		m^3/hr	654 - 1084

Electric Specifications	
Power Supply	230V/1Ph/60Hz
Voltage Range	180-253
Running Amps Cooling	4.1
Running Amps Heating	5.0
MCA	23
Maximum Overcurrent Protection (A)	25
Max Power Input (amps) Cooling	9.5
Max Power Input (amps) Heating	21.7

Included	Wall Controllers + Gateways	
☐	Wireless Remote	WRCH20
☐	Basic Touch Controller	LTCH20
☐	Recessed Touch Controller	RTCH20
☐	Advanced TFT Controller with 7-Day program	TFTH20
☐	Wireless (AA Battery) Infrared Controller with 7-Day program	WIPT20
☐	Third Party Gateway	TPG015
☐	WiFi App	WIFI30
☐	E-Paper EOS Controller	EEOS12
☐	Simple EOS Controller	SEOS12
☐	Integration gateway for LTCH20, TFTH20 and MODBUS	GWN
☐	Integration gateway for LTCH20, TFTH20, MODBUS, BACnet, and third-party thermostats	GWX

10.8 230V Heat Pump + 2,700W Elec Heat + 1kW Preheat + ERV - High Performance

AIO® CEILING DUCTED - 230V - 2,700W ELEC. HEAT+ 1kW PREHEAT + ERV - R32 - SUBMITTAL (ADV10R3H2)

Job	Reference	Construction
Location	Approval	Quote Number
Engineer	Date	Drawing Number
Submitted To	Submitted By:	P.O. Number:

General Features

- BLDC inverter compressor
- ECM fans
- Integrated ERV
- Field configured 900W, 1,800W, or 2,700W electric heat supplement
- Field configured 1kW preheat
- Bathroom exhaust connection
- MERV 13 filters on fresh air
- R32 Refrigerant
- Auto restart
- Intelligent defrost
- No outdoor unit
- Onboard touch controller
- Washable filter
- 3 selectable fan speeds + Auto
- 10-Year limited warranty (after certification)
- Made in Italy

The installing contractor must contact INNOVA Customer Technical Support prior to installation to schedule an installation training overview.

This may be conducted in person or remotely (online) It is the official installation training and may include videos, best practices, and system requirements.

Performing installations without training may result in installation errors, performance issues, and possible warranty limitations.

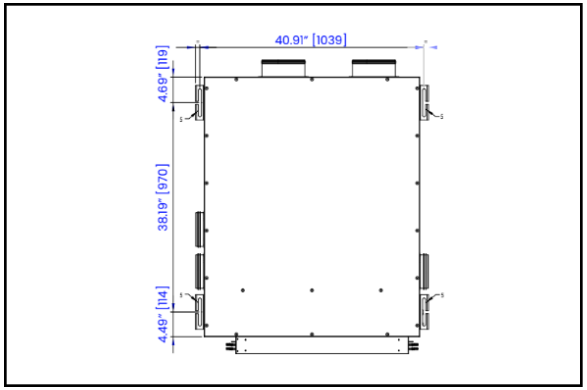

Performance Specifications			
Cooling	Min-Max	BTU/H	3,100 - 15,000
	Rated capacity (95°F)		7,700
	Efficiency	EER2	10.55
Heating	Min-Max	BTU/H	3,500 - 14,000
	Rated capacity (47°F)		8,600
	Rated capacity (5°F)		6,200
	Efficiency	COP	3.64
Sound	Indoor: Low-High at 1 m distance	db(A)	38 - 49
	Indoor: Low-High at 3 m distance		30 - 41
	Outdoor sound range		28 - 55
Moisture removal	Moisture removal	Pts/h	1.8
		L/hr	0.9
Airflow	Indoor	CFM	226 - 400
		m^3/hr	384 - 680
	Outdoor	CFM	385 - 638
		m^3/hr	654 - 1084

Electric Specifications	
Power Supply	230V/1Ph/60Hz
Voltage Range	180-253
Running Amps Cooling	4.1
Running Amps Heating	5.0
MCA	27
Maximum Overcurrent Protection (A)	30
Max Power Input (amps) Cooling	9.5
Max Power Input (amps) Heating	25.6

Included	Wall Controllers + Gateways	
☐	Wireless Remote	WRCH20
☐	Basic Touch Controller	LTCH20
☐	Recessed Touch Controller	RTCH20
☐	Advanced TFT Controller with 7-Day program	TFTH20
☐	Wireless (AA Battery) Infrared Controller with 7-Day program	WIPT20
☐	Third Party Gateway	TPG015
☐	WiFi App	WIFI30
☐	E-Paper EOS Controller	EEOS12
☐	Simple EOS Controller	SEOS12
☐	Integration gateway for LTCH20, TFTH20 and MODBUS	GWN
☐	Integration gateway for LTCH20, TFTH20, MODBUS, BACnet, and third-party thermostats	GWX

10.9 115V Heat Pump + ERV - Energy Star Compliant

AIO® CEILING DUCTED - 115V - NO ELECTRIC HEAT - ERV - R32 - SUBMITTAL (ADP09R3H1)

Job	Reference	Construction
Location	Approval	Quote Number
Engineer	Date	Drawing Number
Submitted To	Submitted By:	P.O. Number:

General Features

- BLDC inverter compressor
- ECM fans
- Integrated ERV
- Field configured 900W electric heat supplement
- Bathroom exhaust connection
- MERV 13 filters on fresh air
- R32 Refrigerant
- Auto restart
- Intelligent defrost
- No outdoor unit
- Onboard touch controller
- Washable filter
- 3 selectable fan speeds + Auto
- 10-Year limited warranty (after certification)
- Made in Italy

The installing contractor must contact INNOVA Customer Technical Support prior to installation to schedule an installation training overview.

This may be conducted in person or remotely (online) It is the official installation training and may include videos, best practices, and system requirements.

Performing installations without training may result in installation errors, performance issues, and possible warranty limitations.

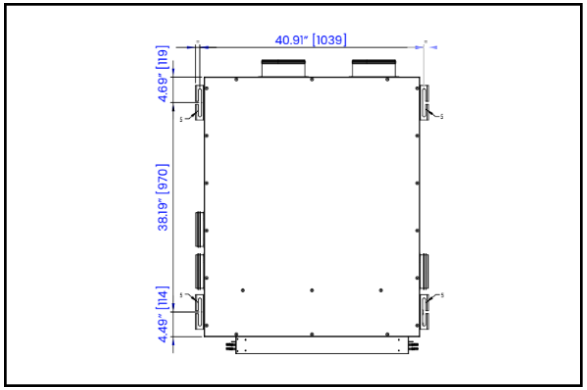

Performance Specifications			
Cooling	Min-Max	BTU/H	3,100 - 15,000
	Rated capacity (95°F)		6,100
	Efficiency	EER2	11.56
Heating	Min-Max	BTU/H	3,500 - 14,000
	Rated capacity (47°F)		8,200
	Rated capacity (5°F)		5,900
	Efficiency	COP	3.73
Sound	Indoor: Low-High at 1 m distance	db(A)	38 - 49
	Indoor: Low-High at 3 m distance		30 - 41
	Outdoor sound range		28 - 55
Moisture removal	Moisture removal	Pts/h	1.8
		L/hr	0.9
Airflow	Indoor	CFM	226 - 400
		m^3/hr	384 - 680
	Outdoor	CFM	385 - 638
		m^3/hr	654 - 1084

Electric Specifications	
Power Supply	115V/1Ph/60Hz
Voltage Range	103-127
Running Amps Cooling	8.2
Running Amps Heating	10.0
MCA	25
Maximum Overcurrent Protection (A)	35
Max Power Input (amps) Cooling	20.9
Max Power Input (amps) Heating	20.9

Included	Wall Controllers + Gateways	
☐	Wireless Remote	WRCH20
☐	Basic Touch Controller	LTCH20
☐	Recessed Touch Controller	RTCH20
☐	Advanced TFT Controller with 7-Day program	TFTH20
☐	Wireless (AA Battery) Infrared Controller with 7-Day program	WIPT20
☐	Third Party Gateway	TPG015
☐	WiFi App	WIFI30
☐	E-Paper EOS Controller	EEOS12
☐	Simple EOS Controller	SEOS12
☐	Integration gateway for LTCH20, TFTH20 and MODBUS	GWN
☐	Integration gateway for LTCH20, TFTH20, MODBUS, BACnet, and third-party thermostats	GWX

10.10 115V Heat Pump + Elec Heat + ERV - Energy Star Compliant

AIO® CEILING DUCTED - 115V + 900 W ELEC. HEAT + ERV - R32 - SUBMITTAL (ADE09R3H1)

Job	Reference	Construction
Location	Approval	Quote Number
Engineer	Date	Drawing Number
Submitted To	Submitted By:	P.O. Number:

General Features

- BLDC inverter compressor
- ECM fans
- Integrated ERV
- Field configured 900W or 1,800W electric heat supplement
- Bathroom exhaust connection
- MERV 13 filters on fresh air
- R32 Refrigerant
- Auto restart
- Intelligent defrost
- No outdoor unit
- Onboard touch controller
- Washable filter
- 3 selectable fan speeds + Auto
- 10-Year limited warranty (after certification)
- Made in Italy

The installing contractor must contact INNOVA Customer Technical Support prior to installation to schedule an installation training overview.

This may be conducted in person or remotely (online) It is the official installation training and may include videos, best practices, and system requirements.

Performing installations without training may result in installation errors, performance issues, and possible warranty limitations.

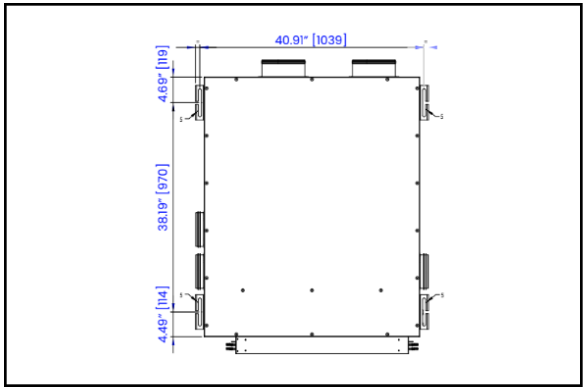

Performance Specifications			
Cooling	Min-Max	BTU/H	3,100 - 15,000
	Rated capacity (95°F)		6,100
	Efficiency	EER2	11.56
Heating	Min-Max	BTU/H	3,500 - 14,000
	Rated capacity (47°F)		8,200
	Rated capacity (5°F)		5,900
	Efficiency	COP	3.73
Sound	Indoor: Low-High at 1 m distance	db(A)	38 - 49
	Indoor: Low-High at 3 m distance		30 - 41
	Outdoor sound range		28 - 55
Moisture removal	Moisture removal	Pts/h	1.8
		L/hr	0.9
Airflow	Indoor	CFM	226 - 400
		m^3/hr	384 - 680
	Outdoor	CFM	385 - 638
		m^3/hr	654 - 1084

Electric Specifications	
Power Supply	115V/1Ph/60Hz
Voltage Range	103-127
Running Amps Cooling	8.2
Running Amps Heating	10.0
MCA	33
Maximum Overcurrent Protection (A)	45
Max Power Input (amps) Cooling	20.9
Max Power Input (amps) Heating	29.1

Included	Wall Controllers + Gateways	
☐	Wireless Remote	WRCH20
☐	Basic Touch Controller	LTCH20
☐	Recessed Touch Controller	RTCH20
☐	Advanced TFT Controller with 7-Day program	TFTH20
☐	Wireless (AA Battery) Infrared Controller with 7-Day program	WIPT20
☐	Third Party Gateway	TPG015
☐	WiFi App	WIFI30
☐	E-Paper EOS Controller	EEOS12
☐	Simple EOS Controller	SEOS12
☐	Integration gateway for LTCH20, TFTH20 and MODBUS	GWN
☐	Integration gateway for LTCH20, TFTH20, MODBUS, BACnet, and third-party thermostats	GWX

10.11 230V Heat Pump + ERV - Energy Star Compliant

AIO® CEILING DUCTED - 230V - NO ELECTRIC HEAT - ERV - R32 - SUBMITTAL (ADP09R3H2)

Job	Reference	Construction
Location	Approval	Quote Number
Engineer	Date	Drawing Number
Submitted To	Submitted By:	P.O. Number:

General Features

- BLDC inverter compressor
- ECM fans
- Integrated ERV
- Field configured 900W or 1,800W electric heat supplement
- Bathroom exhaust connection
- MERV 13 filters on fresh air
- R32 Refrigerant
- Auto restart
- Intelligent defrost
- No outdoor unit
- Onboard touch controller
- Washable filter
- 3 selectable fan speeds + Auto
- 10-Year limited warranty (after certification)
- Made in Italy

The installing contractor must contact INNOVA Customer Technical Support prior to installation to schedule an installation training overview.

This may be conducted in person or remotely (online) It is the official installation training and may include videos, best practices, and system requirements.

Performing installations without training may result in installation errors, performance issues, and possible warranty limitations.

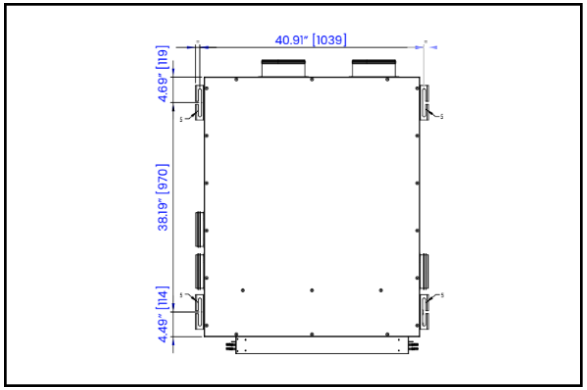

Performance Specifications			
Cooling	Min-Max	BTU/H	3,100 - 15,000
	Rated capacity (95°F)		6,100
	Efficiency	EER2	11.56
Heating	Min-Max	BTU/H	3,500 - 14,000
	Rated capacity (47°F)		8,200
	Rated capacity (5°F)		5,900
	Efficiency	COP	3.73
Sound	Indoor: Low-High at 1 m distance	db(A)	38 - 49
	Indoor: Low-High at 3 m distance		30 - 41
	Outdoor sound range		28 - 55
Moisture removal	Moisture removal	Pts/h	1.8
		L/hr	0.9
Airflow	Indoor	CFM	226 - 400
		m^3/hr	384 - 680
	Outdoor	CFM	385 - 638
		m^3/hr	654 - 1084

Electric Specifications	
Power Supply	230V/1Ph/60Hz
Voltage Range	180-253
Running Amps Cooling	4.1
Running Amps Heating	5.0
MCA	11
Maximum Overcurrent Protection (A)	15
Max Power Input (amps) Cooling	9.5
Max Power Input (amps) Heating	9.5

Included	Wall Controllers + Gateways	
☐	Wireless Remote	WRCH20
☐	Basic Touch Controller	LTCH20
☐	Recessed Touch Controller	RTCH20
☐	Advanced TFT Controller with 7-Day program	TFTH20
☐	Wireless (AA Battery) Infrared Controller with 7-Day program	WIPT20
☐	Third Party Gateway	TPG015
☐	WiFi App	WIFI30
☐	E-Paper EOS Controller	EEOS12
☐	Simple EOS Controller	SEOS12
☐	Integration gateway for LTCH20, TFTH20 and MODBUS	GWN
☐	Integration gateway for LTCH20, TFTH20, MODBUS, BACnet, and third-party thermostats	GWX

10.12 230V Heat Pump + 1,800W Elec Heat + ERV - Energy Star Compliant

AIO® CEILING DUCTED - 230V - 1,800W ELEC. HEAT + ERV - R32 - SUBMITTAL (ADK09R3H2)

Job	Reference	Construction
Location	Approval	Quote Number
Engineer	Date	Drawing Number
Submitted To	Submitted By:	P.O. Number:

General Features

- BLDC inverter compressor
- ECM fans
- Integrated ERV
- Field configured 900W or 1,800W electric heat supplement
- Bathroom exhaust connection
- MERV 13 filters on fresh air
- R32 Refrigerant
- Auto restart
- Intelligent defrost
- No outdoor unit
- Onboard touch controller
- Washable filter
- 3 selectable fan speeds + Auto
- 10-Year limited warranty (after certification)
- Made in Italy

The installing contractor must contact INNOVA Customer Technical Support prior to installation to schedule an installation training overview.

This may be conducted in person or remotely (online) It is the official installation training and may include videos, best practices, and system requirements.

Performing installations without training may result in installation errors, performance issues, and possible warranty limitations.

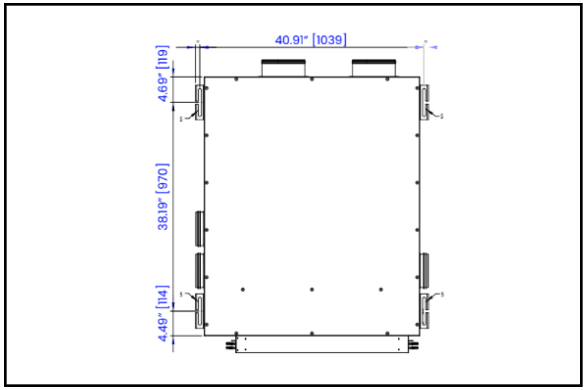

Performance Specifications			
Cooling	Min-Max	BTU/H	3,100 - 15,000
	Rated capacity (95°F)		6,100
	Efficiency	EER2	11.56
Heating	Min-Max	BTU/H	3,500 - 14,000
	Rated capacity (47°F)		8,200
	Rated capacity (5°F)		5,900
	Efficiency	COP	3.73
Sound	Indoor: Low-High at 1 m distance	db(A)	38 - 49
	Indoor: Low-High at 3 m distance		30 - 41
	Outdoor sound range		28 - 55
Moisture removal	Moisture removal	Pts/h	1.8
		L/hr	0.9
Airflow	Indoor	CFM	226 - 400
		m^3/hr	384 - 680
	Outdoor	CFM	385 - 638
		m^3/hr	654 - 1084

Electric Specifications	
Power Supply	230V/1Ph/60Hz
Voltage Range	180-253
Running Amps Cooling	4.1
Running Amps Heating	5.0
MCA	19
Maximum Overcurrent Protection (A)	20
Max Power Input (amps) Cooling	9.5
Max Power Input (amps) Heating	17.3

Included	Wall Controllers + Gateways	
☐	Wireless Remote	WRCH20
☐	Basic Touch Controller	LTCH20
☐	Recessed Touch Controller	RTCH20
☐	Advanced TFT Controller with 7-Day program	TFTH20
☐	Wireless (AA Battery) Infrared Controller with 7-Day program	WIPT20
☐	Third Party Gateway	TPG015
☐	WiFi App	WIFI30
☐	E-Paper EOS Controller	EEOS12
☐	Simple EOS Controller	SEOS12
☐	Integration gateway for LTCH20, TFTH20 and MODBUS	GWN
☐	Integration gateway for LTCH20, TFTH20, MODBUS, BACnet, and third-party thermostats	GWX

10.13 230V Heat Pump + 2,700W Elec Heat + ERV - Energy Star Compliant

AIO® CEILING DUCTED - 230V - 2,700W ELEC. HEAT + ERV - R32 - SUBMITTAL (ADL09R3H2)

Job	Reference	Construction
Location	Approval	Quote Number
Engineer	Date	Drawing Number
Submitted To	Submitted By:	P.O. Number:

General Features

- BLDC inverter compressor
- ECM fans
- Integrated ERV
- Field configured 900W, 1,800W, or 2,700W electric heat supplement
- Bathroom exhaust connection
- MERV 13 filters on fresh air
- R32 Refrigerant
- Auto restart
- Intelligent defrost
- No outdoor unit
- Onboard touch controller
- Washable filter
- 3 selectable fan speeds + Auto
- 10-Year limited warranty (after certification)
- Made in Italy

The installing contractor must contact INNOVA Customer Technical Support prior to installation to schedule an installation training overview.

This may be conducted in person or remotely (online) It is the official installation training and may include videos, best practices, and system requirements.

Performing installations without training may result in installation errors, performance issues, and possible warranty limitations.

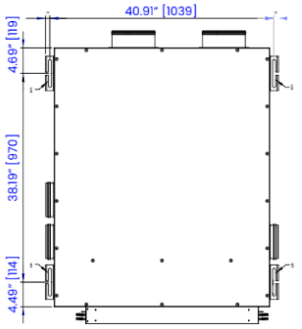

Performance Specifications			
Cooling	Min-Max	BTU/H	3,100 - 15,000
	Rated capacity (95°F)		6,100
	Efficiency	EER2	11.56
Heating	Min-Max	BTU/H	3,500 - 14,000
	Rated capacity (47°F)		8,200
	Rated capacity (5°F)		5,900
	Efficiency	COP	3.73
Sound	Indoor: Low-High at 1 m distance	db(A)	38 - 49
	Indoor: Low-High at 3 m distance		30 - 41
	Outdoor sound range		28 - 55
Moisture removal	Moisture removal	Pts/h	1.8
		L/hr	0.9
Airflow	Indoor	CFM	226 - 400
		m^3/hr	384 - 680
	Outdoor	CFM	385 - 638
		m^3/hr	654 - 1084

Electric Specifications	
Power Supply	230V/1Ph/60Hz
Voltage Range	180-253
Running Amps Cooling	4.1
Running Amps Heating	5.0
MCA	23
Maximum Overcurrent Protection (A)	25
Max Power Input (amps) Cooling	9.5
Max Power Input (amps) Heating	21.2

Included	Wall Controllers + Gateways	
☐	Wireless Remote	WRCH20
☐	Basic Touch Controller	LTCH20
☐	Recessed Touch Controller	RTCH20
☐	Advanced TFT Controller with 7-Day program	TFTH20
☐	Wireless (AA Battery) Infrared Controller with 7-Day program	WIPT20
☐	Third Party Gateway	TPG015
☐	WiFi App	WIFI30
☐	E-Paper EOS Controller	EEOS12
☐	Simple EOS Controller	SEOS12
☐	Integration gateway for LTCH20, TFTH20 and MODBUS	GWN
☐	Integration gateway for LTCH20, TFTH20, MODBUS, BACnet, and third-party thermostats	GWX

10.14 230V Heat Pump + 1kW Preheat + ERV - Energy Star Compliant

AIO® CEILING DUCTED - 230V - 1kW PREHEAT + ERV - R32 - SUBMITTAL (ADH09R3H2)

Job	Reference	Construction
Location	Approval	Quote Number
Engineer	Date	Drawing Number
Submitted To	Submitted By:	P.O. Number:

General Features

- BLDC inverter compressor
- ECM fans
- Integrated ERV
- Field configured 1kW preheat supplement
- Bathroom exhaust connection
- MERV 13 filters on fresh air
- R32 Refrigerant
- Auto restart
- Intelligent defrost
- No outdoor unit
- Onboard touch controller
- Washable filter
- 3 selectable fan speeds + Auto
- 10-Year limited warranty (after certification)
- Made in Italy

The installing contractor must contact INNOVA Customer Technical Support prior to installation to schedule an installation training overview.

This may be conducted in person or remotely (online) It is the official installation training and may include videos, best practices, and system requirements.

Performing installations without training may result in installation errors, performance issues, and possible warranty limitations.

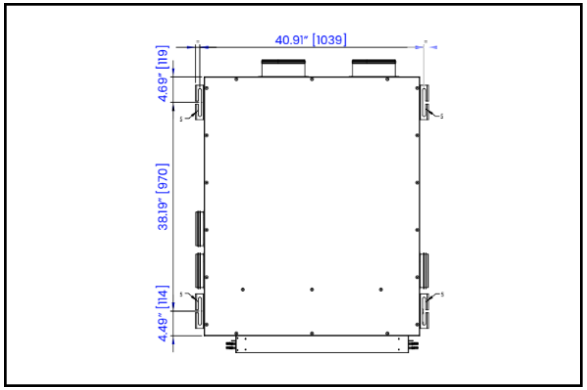

Performance Specifications			
Cooling	Min-Max	BTU/H	3,100 - 15,000
	Rated capacity (95°F)		6,100
	Efficiency	EER2	11.56
Heating	Min-Max	BTU/H	3,500 - 14,000
	Rated capacity (47°F)		8,200
	Rated capacity (5°F)		5,900
	Efficiency	COP	3.73
Sound	Indoor: Low-High at 1 m distance	db(A)	38 - 49
	Indoor: Low-High at 3 m distance		30 - 41
	Outdoor sound range		28 - 55
Moisture removal	Moisture removal	Pts/h	1.8
		L/hr	0.9
Airflow	Indoor	CFM	226 - 400
		m^3/hr	384 - 680
	Outdoor	CFM	385 - 638
		m^3/hr	654 - 1084

Electric Specifications	
Power Supply	230V/1Ph/60Hz
Voltage Range	180-253
Running Amps Cooling	4.1
Running Amps Heating	5.0
MCA	15
Maximum Overcurrent Protection (A)	20
Max Power Input (amps) Cooling	9.5
Max Power Input (amps) Heating	13.8

Included	Wall Controllers + Gateways	
☐	Wireless Remote	WRCH20
☐	Basic Touch Controller	LTCH20
☐	Recessed Touch Controller	RTCH20
☐	Advanced TFT Controller with 7-Day program	TFTH20
☐	Wireless (AA Battery) Infrared Controller with 7-Day program	WIPT20
☐	Third Party Gateway	TPG015
☐	WiFi App	WIFI30
☐	E-Paper EOS Controller	EEOS12
☐	Simple EOS Controller	SEOS12
☐	Integration gateway for LTCH20, TFTH20 and MODBUS	GWN
☐	Integration gateway for LTCH20, TFTH20, MODBUS, BACnet, and third-party thermostats	GWX

10.15 230V Heat Pump + 1,800W Elec Heat + 1kW Preheat + ERV - Energy Star Compliant

AIO® CEILING DUCTED - 230V - 1,800W ELEC. HEAT+ 1kW PREHEAT + ERV - R32 - SUBMITTAL (ADU09R3H2)

Job	Reference	Construction
Location	Approval	Quote Number
Engineer	Date	Drawing Number
Submitted To	Submitted By:	P.O. Number:

General Features

- BLDC inverter compressor
- ECM fans
- Integrated ERV
- Field configured 900W or 1,800W electric heat supplement
- Field configured 1kW preheat
- Bathroom exhaust connection
- MERV 13 filters on fresh air
- R32 Refrigerant
- Auto restart
- Intelligent defrost
- No outdoor unit
- Onboard touch controller
- Washable filter
- 3 selectable fan speeds + Auto
- 10-Year limited warranty (after certification)
- Made in Italy

The installing contractor must contact INNOVA Customer Technical Support prior to installation to schedule an installation training overview.

This may be conducted in person or remotely (online) It is the official installation training and may include videos, best practices, and system requirements.

Performing installations without training may result in installation errors, performance issues, and possible warranty limitations.

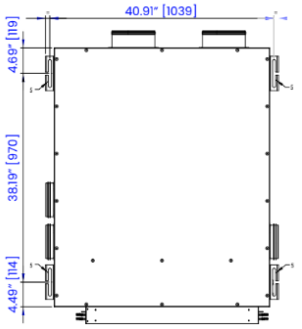

Performance Specifications			
Cooling	Min-Max	BTU/H	3,100 - 15,000
	Rated capacity (95°F)		6,100
	Efficiency	EER2	11.56
Heating	Min-Max	BTU/H	3,500 - 14,000
	Rated capacity (47°F)		8,200
	Rated capacity (5°F)		5,900
	Efficiency	COP	3.73
Sound	Indoor: Low-High at 1 m distance	db(A)	38 - 49
	Indoor: Low-High at 3 m distance		30 - 41
	Outdoor sound range		28 - 55
Moisture removal	Moisture removal	Pts/h	1.8
		L/hr	0.9
Airflow	Indoor	CFM	226 - 400
		m^3/hr	384 - 680
	Outdoor	CFM	385 - 638
		m^3/hr	654 - 1084

Electric Specifications	
Power Supply	230V/1Ph/60Hz
Voltage Range	180-253
Running Amps Cooling	4.1
Running Amps Heating	5.0
MCA	23
Maximum Overcurrent Protection (A)	25
Max Power Input (amps) Cooling	9.5
Max Power Input (amps) Heating	21.7

Included	Wall Controllers + Gateways	
☐	Wireless Remote	WRCH20
☐	Basic Touch Controller	LTCH20
☐	Recessed Touch Controller	RTCH20
☐	Advanced TFT Controller with 7-Day program	TFTH20
☐	Wireless (AA Battery) Infrared Controller with 7-Day program	WIPT20
☐	Third Party Gateway	TPG015
☐	WiFi App	WIFI30
☐	E-Paper EOS Controller	EEOS12
☐	Simple EOS Controller	SEOS12
☐	Integration gateway for LTCH20, TFTH20 and MODBUS	GWN
☐	Integration gateway for LTCH20, TFTH20, MODBUS, BACnet, and third-party thermostats	GWX

10.16 230V Heat Pump + 2,700W Elec Heat + 1kW Preheat + ERV - Energy Star Compliant

AIO® CEILING DUCTED - 230V - 2,700W ELEC. HEAT+ 1kW PREHEAT + ERV - R32 - SUBMITTAL (ADV09R3H2)

Job	Reference	Construction
Location	Approval	Quote Number
Engineer	Date	Drawing Number
Submitted To	Submitted By:	P.O. Number:

General Features

- BLDC inverter compressor
- ECM fans
- Integrated ERV
- Field configured 900W, 1,800W, or 2,700W electric heat supplement
- Field configured 1kW preheat
- Bathroom exhaust connection
- MERV 13 filters on fresh air
- R32 Refrigerant
- Auto restart
- Intelligent defrost
- No outdoor unit
- Onboard touch controller
- Washable filter
- 3 selectable fan speeds + Auto
- 10-Year limited warranty (after certification)
- Made in Italy

The installing contractor must contact INNOVA Customer Technical Support prior to installation to schedule an installation training overview.

This may be conducted in person or remotely (online) It is the official installation training and may include videos, best practices, and system requirements.

Performing installations without training may result in installation errors, performance issues, and possible warranty limitations.

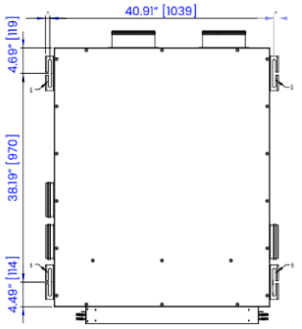

Performance Specifications			
Cooling	Min-Max	BTU/H	3,100 - 15,000
	Rated capacity (95°F)		6,100
	Efficiency	EER2	11.56
Heating	Min-Max	BTU/H	3,500 - 14,000
	Rated capacity (47°F)		8,200
	Rated capacity (5°F)		5,900
	Efficiency	COP	3.73
Sound	Indoor: Low-High at 1 m distance	db(A)	38 - 49
	Indoor: Low-High at 3 m distance		30 - 41
	Outdoor sound range		28 - 55
Moisture removal	Moisture removal	Pts/h	1.8
		L/hr	0.9
Airflow	Indoor	CFM	226 - 400
		m^3/hr	384 - 680
	Outdoor	CFM	385 - 638
		m^3/hr	654 - 1084

Electric Specifications	
Power Supply	230V/1Ph/60Hz
Voltage Range	180-253
Running Amps Cooling	4.1
Running Amps Heating	5.0
MCA	27
Maximum Overcurrent Protection (A)	30
Max Power Input (amps) Cooling	9.5
Max Power Input (amps) Heating	25.6

Included	Wall Controllers + Gateways	
☐	Wireless Remote	WRCH20
☐	Basic Touch Controller	LTCH20
☐	Recessed Touch Controller	RTCH20
☐	Advanced TFT Controller with 7-Day program	TFTH20
☐	Wireless (AA Battery) Infrared Controller with 7-Day program	WIPT20
☐	Third Party Gateway	TPG015
☐	WiFi App	WIFI30
☐	E-Paper EOS Controller	EEOS12
☐	Simple EOS Controller	SEOS12
☐	Integration gateway for LTCH20, TFTH20 and MODBUS	GWN
☐	Integration gateway for LTCH20, TFTH20, MODBUS, BACnet, and third-party thermostats	GWX

With over 20 years of experience in the climate comfort sector, we have a clear goal: growth through innovation. Our team is laser-focused on the conception, development, and production of innovative heating, ventilation, and air conditioning solutions. This mission has developed through bringing together technical skills, creativity, technology, design, Italian passion, and a global vision to achieve the best energy efficiency and performance.

innova.co | **USA:** 216-710-1000 **Canada:** 416-739-1000

MADE IN ITALY

© 2026 INNOVA. All rights reserved.

Revised October 5, 2026

AIO® Ceiling Ducted with ERV (Gen 4)
Product Data Sheet