AIO® Floor Standing

Product Data Sheet



innova

AHRI CERTIFIED® www.ahridirectory.org
Unitary Small HP
AHRI Standard 210/240

ETL LISTED C US Intertek

neep

energy ENERGY STAR

CONTACT INFO

VIP Customer/Technical Support
Email: vip@innova.co
Phone: (212) 204-2700

DISCLAIMER

This documentation is intended for informational use only and should not be construed as a binding representation or contract. This documentation is provided "as is" without warranty of any kind, either express or implied. INNOVA and its affiliates disclaim all liability arising from the use or misuse of this documentation.

Illustrations may not be to scale, and all information and dimensions stated herein are subject to change at any time at the sole discretion of INNOVA. Benefits described herein apply only to the extent that the product is installed correctly in the correct application and used for its intended purpose.

INNOVA is constantly innovating and improving its products and reserves the right to modify product design and specifications without notice and without incurring any obligations.

CERTIFICATIONS & LISTINGS

The AHRI Certified® mark indicates INNOVA's participation in the AHRI Certification program. For verification of individual certified products, go to www.ahridirectory.org.

ETL Listed. Control Number: 5032306. Conforms to: UL 60335-2-40:2022 Ed.4 | CSA C22.2#60335-2-40:2022 Ed.4 | UL 60335-1:2016 Ed.6 | CSA C22.2#60335-1:2016 Ed.2

MODEL NUMBER NOMENCLATURE

The code identifies the family, model, version, size, voltage, accessories, refrigerant type, and ERV option. See the diagram below for details.

Figure 1. AIO® nomenclature

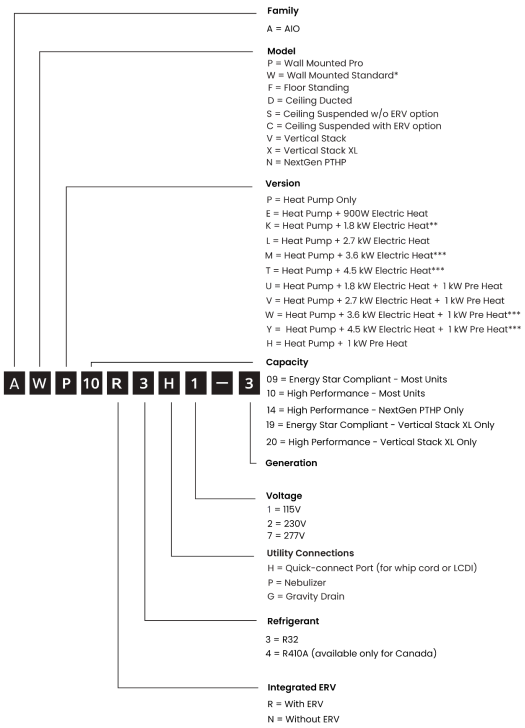

* 8" Vents : Just generation (e.g. = 3)

6" Vents : Generation + SP (e.g. = 3SP)

** Field convertible to 900W

*** AIO® Vertical Stack XL **Only**

AIO® is a registered trademark of INNOVA.
Copyright © 2026 INNOVA. All rights reserved.

CONTENTS

1. READING THIS DOCUMENTATION..... 4

1.1 Documentation-specific language..... 4

1.2 Annotation icons..... 4

2. AIO® FLOOR STANDING OVERVIEW..... 4

2.1 Components and structure..... 4

2.2 Key Features..... 5

3. AIRFLOW..... 5

3.1 Airflow operation..... 5

3.2 Airflow diagram..... 5

4. INSTALLATION REQUIREMENTS..... 6

4.1 Low ambient heating configuration requirement..... 6

4.2 Site requirements..... 6

4.3 Louver specifications..... 7

4.4 Clearance requirements..... 7

5. TECHNICAL SPECIFICATIONS..... 7

5.1 Cooling..... 7

5.1.1 Heat pump..... 7

5.2 Heating..... 7

5.2.1 Heat pump..... 7

5.2.2 Heat pump + optional 3,000 BTU/hr electric heat..... 8

5.2.3 Heat pump + optional 6,100 BTU/hr electric heat..... 8

5.3 Airflow..... 8

5.3.1 Indoor..... 8

5.3.2 Outdoor..... 8

5.4 Sound..... 8

5.5 General..... 8

5.5.1 Controls..... 8

5.5.2 Modes..... 8

5.5.3 Condensate..... 8

5.5.4 Physical..... 9

5.5.5 Compressor..... 9

5.6 Electrical..... 9

5.6.1 General..... 9

5.6.2 Motors..... 9

5.6.3 LCDI Power cords..... 9

6. WIRING DIAGRAM..... 10

6.1 AIO® Floor Standing 230V Heat pump only..... 10

6.2 AIO® Floor Standing 230V Heat pump + electric heat..... 10

6.3 Parts list..... 10

7. DIMENSIONS..... 11

8. WARRANTY..... 11

8.1 Basic coverage..... 11

8.2 Optional extended coverage..... 11

8.3 Validation requirements..... 11

9. SUBMITTALS..... 12

9.1 115V Heat pump only..... 12

9.2 115V Heat pump + elec heat..... 13

9.3 230V Heat pump only..... 14

9.4 230V Heat pump + elec heat..... 15

1. READING THIS DOCUMENTATION

Some language and symbols in this documentation have specific meanings.

1.1 Documentation-specific language

Reference to the product
Any reference to "the unit" refers to the AIO® Floor Standing unit.

Unit orientation
All directions in this guide (left, right, top, bottom) are given from the perspective of facing the unit.

1.2 Annotation icons

Annotations are provided throughout this guide. It is essential to read each carefully and follow the instructions stated.

Indicates critical information for correct operation or installation.

Indicates supplemental information, tips, or useful background information.

2. AIO® FLOOR STANDING OVERVIEW

⚠ WARNING

Only qualified professionals should install this equipment. Improper modifications by an unqualified person could result in death or serious injury. When working on the equipment, observe all precautions in the guide and on labels attached to the equipment.

2.1 Components and structure

Figure 2. AIO® Floor Standing components and structure

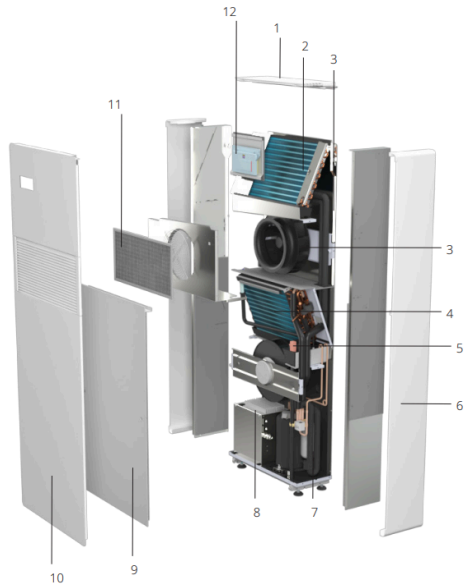

1	Return air grille	**7**	BLDC inverter compressor
2	High-efficiency indoor heat exchanger	**8**	Electrical and control panel
3	ECM centrifugal supply fan	**9**	Insulation panel
4	Outdoor high-efficiency heat exchanger	**10**	Decorative cover panel
5	ECM centrifugal condenser fan	**11**	Washable filter
6	Side panel	**12**	Touchscreen controller

2.2 Key Features

No outdoor unit
The single package design means that there is no outdoor unit, freeing up space on rooftops and at ground level and enabling installations in buildings without space for an outdoor unit.

Twin rotary BLDC inverter compressor
The state-of-the-art, twin rotary Brushless DC (BLDC) inverter compressor operates efficiently, quietly, and with minimal vibration. AIO®'s Floor Standing unit is ideal for any room or area that requires between 4,000 and 10,500 BTU/hr.

High-efficiency ECM fans with auto ESP
High-efficiency electronically commutated motor (ECM) fans enable efficient and quiet operation because the EC motor can ramp up or down depending on the need. Automatically adjusted external static pressure ensures correct airflow.

Cold climate heat pump
The heat pump efficiently functions in temperatures as low as 5°F (-15°C) outdoors.

Optional 1,800-watt electric heat
The optional electric heating system operates alongside the heat pump when the latter lacks adequate power. This electric heating setup consists of two 900W heaters, strategically staged to optimize efficiency while minimizing the consumption of electric heat. The unit offers configuration options for electric heat usage: It can be set to use no electric heat, 900W electric heat, or 1,800W electric heat, providing flexibility and energy management capabilities.

Intelligent defrosting
AIO®'s intelligent defrosting system means more time heating and less time on reverse cycle defrost.

Coil cooling system
The condensate mist system drizzles the condensate on the outdoor heat exchanger coils, lowering the coil's temperature and increasing efficiency and performance.

Quiet
With whisper-quiet operation as low as 27 decibels, the occupant will barely notice that the AIO® Floor Standing unit is operating.

No outside noise infiltration
AIO® has the lowest Sound Transmission Class (STC) and Outdoor-Indoor Transmission Class (OITC) rating among comparable units. This means less outside noise intrudes into the room day and night.

Versatile on/off options
AIO®'s low-voltage connection enables connection to any Building Management System (BMS), key-card system, window sensors, fire alarms, etc. As long as a system can send a signal to the AIO® unit via low voltage, the unit can be easily turned on or off.

Minimal clearances and compact footprint
AIO®'s compact form does not use any line sets. This means that there is no need to access the sides of the unit. You can mount units with as little as 3/4 inch (19 mm) clearance on all sides.

Leak protection
If a drain becomes clogged, the system shuts down and an alarm is activated. This prevents water damage.

Easy to service
The AIO® unit can be easily maintained and repaired from the front or bottom of the unit without having to move it. An AIO® unit can also be quickly swapped with a replacement, reducing downtime.

Versatile controls
The AIO® unit includes an onboard touch controller and an optional iOS and Android app. AIO® can be used with optional wall-mounted controllers, including a Thin Film Transistor (TFT) with a 7-day program, and third-party controllers from any company, using the optional third-party kit. An optional BACnet and Modbus module enables interfacing with building management systems

3. AIRFLOW

3.1 Airflow operation

The following are the airflow requirements for the AIO® Floor Standing unit.

- **Supply air**
  Air is supplied through an electronically controlled louver that can be set at any angle or oscillate continuously.
- **Return air**
  The return air is on the top of the unit through the integrated return air grille.
- **Outside air intake**
  The 6-inch (152.4 mm) outside air intake connection works with any of the approved or custom louvers, as long as they comply with the minimum requirements. See page 3.
- **Outside air exhaust**
  The 6-inch (152 mm) round outside air exhaust connection works with any of the approved or custom louvers, as long as they comply with the minimum requirements. See page 3.

3.2 Airflow diagram

Figure 3. Airflow

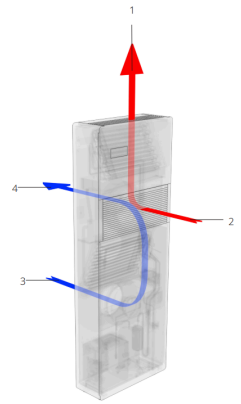

Outside air Recirculate air

1	Supply air	3	Outside air intake

2	Room return air	4	Exhaust

4. INSTALLATION REQUIREMENTS

Figure 4. Installation



4.1 Low ambient heating configuration requirement

To configure the unit for electric resistance heating in low ambient conditions:

1. Press and hold **Power** for 10 seconds to enter the **User Menu**.
2. Press and hold **+** and **–** simultaneously for 10 seconds to enter the **Installer Menu**.
3. Use **+** / **–** to scroll to **HE**, then press **Power**.
4. Use **+** / **–** to select **RT**, then press **Power** to save (save icon appears).
5. When returned to the main screen, press **A**, then press **A** again.

This setting shifts the unit to electric resistance heating during low ambient conditions, preventing heat pump operation that may contribute to ice formation.

4.2 Site requirements

Refer to the installation manual for complete installation requirements and specifications.

- Where practical, avoid installing the unit in a location exposed to direct sunlight. Solar heating may cause the room-air temperature sensor to detect a temperature higher than the actual room temperature, resulting in improper temperature control, unnecessary cooling operation, reduced heating output, and decreased energy efficiency.
- A power supply circuit installed in accordance with the current edition of NEC (ANSI/NFPA 70) and local codes and ordinances.

- Always consult local and national electrical codes before installing the unit.
- Damage or premature failure of the quoted equipment resulting from improper voltage conditions, inadequate electrical service, or operating the equipment with excessive THD (Total Harmonic Distortion) levels will void the Manufacturer's warranty.
- Do not operate the unit in or near a construction or renovation site. Dust and debris can enter the unit, causing malfunctions and reduced performance.

- A power supply with a voltage rating of 60 Hz, single phase, in 115V or 208/230V, in accordance with the model specified.

- All responsible parties must verify that the electrical supply is properly grounded, free of excessive electrical noise, and within the specified voltage and frequency limits before energizing the unit. Failure to correct power quality issues, including voltage instability or electrical noise, may result in equipment damage and will void the warranty for affected components.
- Interior clearances are as follows:
  - Sides of unit to wall: 2.5" (64 mm)
  - Top of unit to any obstruction: 4" (102 mm)
- Unblocked vents on the exterior and no obstacles within 36" (914 mm).
- An internal drain is highly recommended.
- If using an externally run condensate line, note the following:
  - The line must be properly insulated.
  - The line must have a minimum slope of 2%.
- If on a low floor, ensure that the end of the drain is above the maximum height of snow buildup.
- Approved louvers must be installed with best practices to ensure that no water enters the wall assembly.
- 6" (152 mm) diameter ducts through the wall, which protrude ⅛" (3 mm) into the unit's EPDM backing to ensure a tight seal.
- The unit must be perfectly level on both the horizontal and vertical axes..
- The unit must be tightly attached to the ducts, with zero leakage between the external ducts and the unit. If the wall is not plumb, use insulating material.
- The wall bracket must be properly affixed to wall studs or other supporting material.

The wall bracket must be secured in several places.

4.3 Louver specifications

AIO® Floor Standing units can be vented using many kinds of custom and creative solutions. The possibilities are endless, from perforated panels to custom louvers.

There are two critical factors in selecting and sizing a solution that will work with AIO® Floor Standing units.

- **Free area:** The area on a louver/grille that is open for the air to flow through. The louver, perforated panel, or other solution must have at least the amount of free area specified in the specifications below in the plenum from the unit, so that ample air can enter and exit the condenser chamber. A more restrictive solution with a smaller free area can be utilized by enlarging the louver and plenum until the required free area is achieved.

The minimum free area required is 0.21 square feet (0.02 m^2) for the intake vent and 0.21 square feet (0.02 m^2) for the exhaust vent.

- **Pressure drop:** Pressure drop is the resistance the louver/grille creates against the airflow. This resistance can create heat build-up inside the condenser portion, causing the compressor to overheat and shut down. A solution with a higher pressure drop than specified can be utilized by enlarging the louver and plenum until the pressure drop is within specification.

- The maximum total pressure for the intake and exhaust louvers combined must be under 0.25" WC (62.3 Pa).
- Any louver must meet these requirements, because exceeding these limits can cause the unit to overheat and fail. This will void the warranty.

The following louvers are approved for the AIO® Floor Standing unit:

- **Sunvent:** LLA/C, LLA/M, LLA/S - available through your INNOVA distributor.
- **Thermaduct:** RLA6 - available through your INNOVA distributor.
- **Primex:** WCL8, WC6, WC8 - available online and in stores.
- **Dundas Jaffine:** IH6WXZ - available online and in stores.

4.4 Clearance requirements

The clearances for the AIO® Floor Standing unit are shown in the figure. Clearances are required for proper airflow, maintenance, and cleaning.

Sides:
A minimum of 2.5" (64 mm) clearance should be maintained on each side of the unit.

Top:
A minimum of 4" (102 mm) clearance should be maintained at the top of the unit for proper airflow.

Figure 5. Clearance

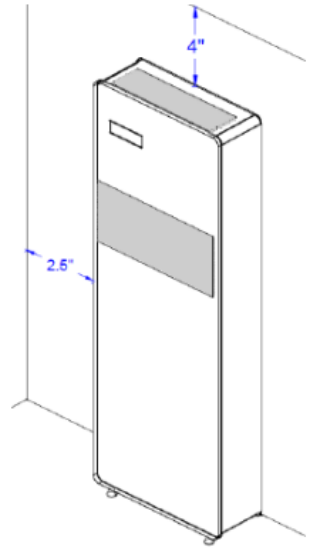

5. TECHNICAL SPECIFICATIONS

5.1 Cooling

5.1.1 Heat pump

Table 1. Performance - Cooling

Heat Pump		**95°F (35°C)** (1)	**105°F (40.6°C)** (2)	**115°F (46.1°C)** (3)
Maximum*	BTU/hr	10,100	8,900	8,500
Rated**		7,500	7,400	7,100
Minimum		3,300	3,800	4,300
Input Power	W	1,060	915	982
Efficiency		13.58 SEER2	8.17 EER2	7.23 EER2
Moisture Removal	Pts/h	1.9	-	-

Notes

(1) ID: 80°F(26.7°C), W.B. 67°F(19.4°C) | OD: 95°F(35°C), W.B. 75°F(23.9°C)

(2) ID: 80°F(26.7°C), W.B. 67°F(19.4°C) | OD: 105°F(40.6°C), W.B. 75°F(23.9°C)

(3) ID: 80°F(26.7°C), W.B. 67°F(19.4°C) | OD: 115°F(46.1°C), W.B. 75°F(23.9°C)

5.2 Heating

5.2.1 Heat pump

Table 2. Performance - Heating

Heat Pump		**47°F (8.3°C)** (1)	**17°F (-8.3°C)** (2)	**5°F (-15°C)** (3)	**0°F (-17.8°C)** (4)	**-5°F (-20.6°C)** (5)
Maximum*	BTU /hr	10,100	7,460	6,600	6,100	5,600
Rated**		7,800	6,075	5,500	5,100	4,900
Minimum		3,000	3,000	3,000	3,000	3,000
Input Power	W	723	927	950	900	867
Efficiency		6.96 HSPF2	1.83 COP	1.72 COP	1.67 COP	1.64 COP

Notes

(1) ID: 70°F(21.1°C), W.B. 60°F(15.6°C) | OD: 47°F(8.3°C), W.B. 43°F(6.1°C)

(2) ID: 70°F(21.1°C), W.B. 60°F(15.6°C) | OD: 17°F(-8.3°C), W.B. 15°F(-9.4°C)

(3) ID: 70°F(21.1°C), W.B. 60°F(15.6°C) | OD: 5°F(-15°C), W.B. 3°F(-16.1°C)

(4) ID: 70°F(21.1°C), W.B. 60°F(15.6°C) | OD: 0°F(-17.8°C)

(5) ID: 70°F(21.1°C), W.B. 60°F(15.6°C) | OD: -5°F(-20.6°C)

5.2.2 Heat pump + optional 3,000 BTU/hr electric heat

Table 3. Performance - Heat pump + optional 3,000 BTU/hr electric heat

Heat Pump		47°F (8.3°C) (1)	17°F (-8.3°C) (2)	5°F (-15°C) (3)	0°F (-17.8°C) (4)	-5°F (-20.6°C) (5)
Maximum*	BTU /hr	13,100	10,460	9,600	9,100	8,600
Rated**		10,800	9,075	8,500	8,100	7,900
Minimum		6,000	6,000	6,000	6,000	6,000
Input Power	W	1,601	1,805	1,828	1,779	1,745

Notes

(1) ID: 70°F(21.1°C), W.B. 60°F(15.6°C) | OD: 47°F(8.3°C), W.B. 43°F(6.1°C)

(2) ID: 70°F(21.1°C), W.B. 60°F(15.6°C) | OD: 17°F(-8.3°C), W.B. 15°F(-9.4°C)

(3) ID: 70°F(21.1°C), W.B. 60°F(15.6°C) | OD: 5°F(-15°C), W.B. 3°F(-16.1°C)

(4) ID: 70°F(21.1°C), W.B. 60°F(15.6°C) | OD: 0°F (-17.8°C)

(5) ID: 70°F(21.1°C), W.B. 60°F(15.6°C) | OD: -5°F (-20.6°C)

5.2.3 Heat pump + optional 6,100 BTU/hr electric heat

Table 4. Performance - Heat pump + optional 6,100 BTU/hr electric heat

Heat Pump		47°F (8.3°C) (1)	17°F (-8.3°C) (2)	5°F (-15°C) (3)	0°F (-17.8°C) (4)	-5°F (-20.6°C) (5)
Maximum*	BTU /hr	16,200	13,560	12,700	12,200	11,700
Rated**		13,900	12,175	11,600	11,200	10,900
Minimum		9,100	9,100	9,100	9,100	9,100
Input Power	W	2,510	2,714	2,737	2,687	2,654

Notes

(1) ID: 70°F(21.1°C), W.B. 60°F(15.6°C) | OD: 47°F(8.3°C), W.B. 43°F(6.1°C)

(2) ID: 70°F(21.1°C), W.B. 60°F(15.6°C) | OD: 17°F(-8.3°C), W.B. 15°F(-9.4°C)

(3) ID: 70°F(21.1°C), W.B. 60°F(15.6°C) | OD: 5°F(-15°C), W.B. 3°F(-16.1°C)

(4) ID: 70°F(21.1°C), W.B. 60°F(15.6°C) | OD: 0°F (-17.8°C)

(5) ID: 70°F(21.1°C), W.B. 60°F(15.6°C) | OD: -5°F (-20.6°C)

- *** Important:** Maximum capacity is not intended for design specifications. It represents a temporary operation only, such as when outdoor temperatures exceed design conditions or when the room load is higher than design due to added occupants. Because it does not reflect normal unit performance, the AIO® unit can operate above its rated capacity for no more than 30 minutes at a time.
- **** Rated capacities** are based on AHRI test data with the fan at high speed.

5.3 Airflow

5.3.1 Indoor

Table 5. Airflow - Indoor

Air volume			
Indoor	Type		ECM centrifugal
	Flow	CFM	160 - 235
		m^3/hr	272 - 399
	Available ESP		N/A
	Supply connection		Integrated
	Return connection		Integrated
	Speeds		Low, med, high, auto
	Filter		MERV 3

5.3.2 Outdoor

Table 6. Airflow - Outdoor

Air volume			
Outdoor	Type		ECM centrifugal
	Flow	CFM	184 - 350
		m^3/hr	313 - 595
	Available ESP		0.25" WC (62.3 Pa)
	Intake and Exhaust connection		6" (152 mm) round (external exhaust fan is 6.0" (152 mm) diameter - leave room for clearance

5.4 Sound

Table 7. Sound

Sound		
Indoor	dB(A)	27-41
	STC	37
	OITC	28
Outdoor	dB(A)	28-52

5.5 General

5.5.1 Controls

Table 8. General - Controls

Controls	
Basic functionality	Dependent on controller
WiFi	Optional module available
Dry contact	Yes

5.5.2 Modes

Table 9. General - Modes

Modes	
Operation	Cool, heat, dehumidify, auto
Restricted modes	Heat only, cool only, temperature limiting
Timers	Dependent on the controller

5.5.3 Condensate

Table 10. General - Condensate

Condensate	
Pipe size	3/4" (19 mm) Outside diameter
Pipe material	Rubber

5.5.4 Physical

For detailed dimensions, refer to the drawings in Section 7.

Table 11. General - Physical

Physical data			
Dimensions		in	19 W x 53.3 H x 6.9 D
		mm	483 W x 1354 H x 175 D
Weight	Net	lb	100
		kg	45.4
	Gross	lb	105
		kg	47.6
Cabinet	Finish		RAL 9003 signal white
	Material		Steel

5.5.5 Compressor

Table 12. General - Compressor

Compressor		
Type	BLDC twin rotary inverter	
Refrigerant	Refrigerant Type	R32
	Charge Quantity	21.87 oz.
		620 g
Oil Type	Fv50s	

5.6 Electrical

5.6.1 General

Table 13. Electrical - General 115V and 230V

Physical data		115V	230V
Volt range		103-127	180-253
Hz/phase		60 Hz/single phase	
Power supply		LCDI power cord or hardwire	
Power factor (%)		0.96	0.96
Input power (standby)	W	10.8	10.8
Input power (off mode)	W	1.5	1.5
Cooling (nominal)	A	7.7	3.8
Cooling (max)	A	9.6	4.8
Heat Pump Only			
Heating-heat pump only (nom.)	A	5.1	2.6
Heating-heat pump only (max)	A	10.4	5.2
Heat Pump+900 W Elec Heat			
Heating-heat pump+900 W Elec Heat (nom.)	A	12.9	6.6
Heating-heat pump+900 W Elec Heat (max)	A	16.3	9.1
Heating-Heat Pump+1,800 W Elec Heat (nom)	A	N/A	10.5
Heating-Heat Pump+1,800 W Elec Heat (max)	A	N/A	13.1 A

Table 14. Electrical - Circuit breakers

Circuit breakers		115V	230V
Heat Pump Only	MCA	13A	6A
	MOCP	25A	15A
Heat Pump+900 W Elec Heat	MCA	21A	14A
	MOCP	35A	20A

5.6.2 Motors

Table 15. Electrical - Motors

Motors			115V	230V
Compressor	RLA	A	5.6	2.8
	LRA		7.9	3.9
Indoor ECM fan motor	Watts (max)	W	50	50
	FLA	A	0.4	0.2
	Power	HP	0.07	0.07
Outdoor ECM fan motor	Watts (max)	W	90	90
	FLA	A	0.8	0.4
	Power	HP	0.12	0.12

In accordance with UL 60335-2-40, motor compressor ratings for Rated Load Amps (RLA) and Locked Rotor Amps (LRA) are determined according to Annex 101.DVB. For motor-compressors controlled by an adjustable speed drive, RLA and LRA shall be replaced with the rated input current of the power conversion equipment.

5.6.3 LCDI Power cords

Table 16. Electrical - LCDI Power cords

LCDI Power Cord		115V	230V
Heat Pump Only	Amps	20	15
	Plug Type	5-20P	6-15P
Heat Pump+900 W Elec Heat	Amps	-	15
	Plug Type	-	6-15P

LCDI cord is not available in 115V above 20 A.

For units requiring a breaker size above 20 A, a quick-connect whip cord is available as an accessory (60" (1524 mm) length).

6. WIRING DIAGRAM

6.1 AIO® Floor Standing 230V Heat pump only

To view the diagram as a high-resolution PDF, click the link below:

AIO Floor Standing (230V Heat Pump Only) Wiring...

Figure 6. Floor Standing 230V Heat Pump Only

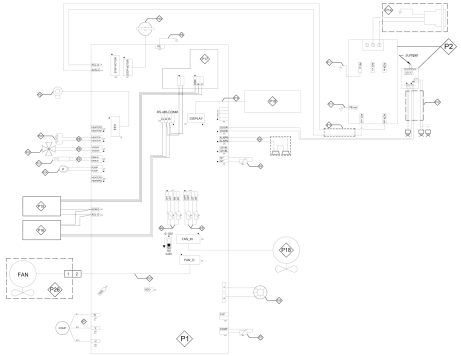

6.2 AIO® Floor Standing 230V Heat pump + electric heat

To view the diagram as a high-resolution PDF, click the link below:

AIO Floor Standing (230V with Elec Heat) Wiring D...

Figure 7. Floor Standing 230V Elec Heat

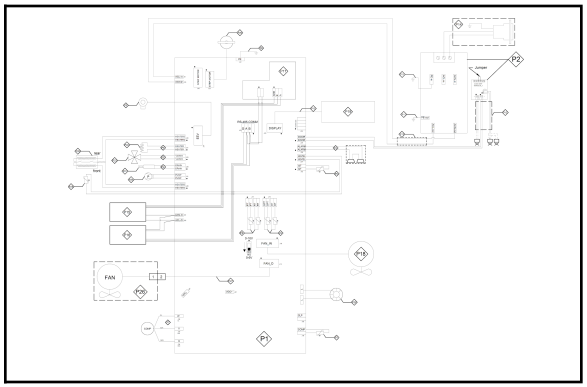

6.3 Parts list

Table 17. Wiring Diagram - Electric Heat Parts

Electric Heat Parts		230V
P1	Description	Integrated PCB
	INNOVA Code	N540205A
	Note	Included in N576205A
P2	Description	Filter 2.0 18A PCB
	INNOVA Code	N560536A
	Note	Included in N576205A
P3	Description	EEV Coil
	INNOVA Code	N276928B
	Note	Included in N576205A
P4	Description	Pan cable harness
	INNOVA Code	N576205A_02
	Note	Included in N576205A
P5	Description	4-way valve cable + temperature sensor
	INNOVA Code	N576205A_03
	Note	Included in N576205A
P6	Description	Indoor and Incoil temperature sensors
	INNOVA Code	N576205A_04
	Note	Included in N576205A
P7	Description	Compressor cables + discharge temperature sensor
	INNOVA Code	N576205A_05
	Note	Included in N576205A
P8	Description	PE IntPCB
	INNOVA Code	N576205A_06
	Note	Included in N576205A
P9	Description	Kit wiring heating elements
	INNOVA Code	N576205A_07
	Note	Included in N576205A
P10	Description	Display cable
	INNOVA Code	N576205A_08
	Note	Included in N576205A
P11	Description	PE filter wiring diagram
	INNOVA Code	N576205A_09
	Note	Included in N576205A
P12	Description	Transfer cables wiring diagram
	INNOVA Code	N576205A_10
	Note	Included in N576205A
P13	Description	Power supply to IntPCB
	INNOVA Code	N576205A_11
	Note	Included in N576205A
P14	Description	Power cable with USA 2.0 NC connector
	INNOVA Code	N500399A
P15	Description	Power + RS485 cable for ERV 2.0NC
	INNOVA Code	N500400A
P16	Description	2.0NC Rolbit power + communication cable
	INNOVA Code	N500403A
P17	Description	WI-FI Expansion 2.0/WLH
	INNOVA Code	N540217A
P18	Description	Internal Fan
	INNOVA Code	N276300B
P19	Description	Display

Electric Heat Parts		230V
	INNOVA Code	N570177A
P20	Description	Flap motor
	INNOVA Code	N276300B
P21	Description	Drain thermo actuator
	INNOVA Code	276417A
P22	Description	Heating element kit
	INNOVA Code	N560043B
	Note	230V version
P23	Description	4-way valve
	INNOVA Code	N276916A
	Note	230V version
P24	Description	Drain pump
	INNOVA Code	N640019A
	Note	230V version
P25	Description	PFC Reactor
	INNOVA Code	N579099A
	Note	230V version
P26	Description	External mixed flow fan
	INNOVA Code	N520227A
P27	Description	External fan cable from IntPCB to base
	INNOVA Code	N500398A
P28	Description	Tubular heating element 2x900w -230V
	INNOVA Code	N560506A
P29	Description	187.25 kilo-ohm copper probe L = 300mm
	INNOVA Code	N500321A

7. DIMENSIONS

To view the dimensions as a high-resolution PDF, click the link below:

AIO Floor Standing Dimensions (V 5.0).pdf

Figure 8. Floor Standing Dimensions

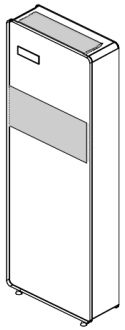

Figure 9. Dimensions (top view)

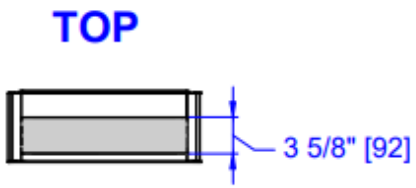

Figure 10. Dimensions (left view)

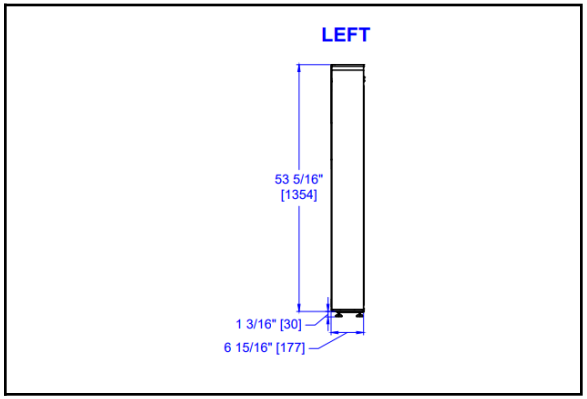

Figure 11. Dimensions (front view)

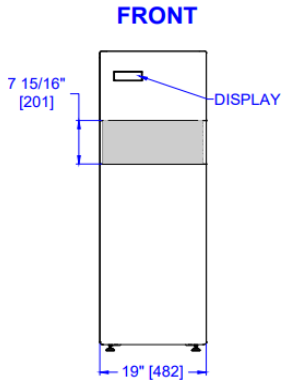

Figure 12. Dimensions (right view)



Figure 13. Dimensions (rear view)

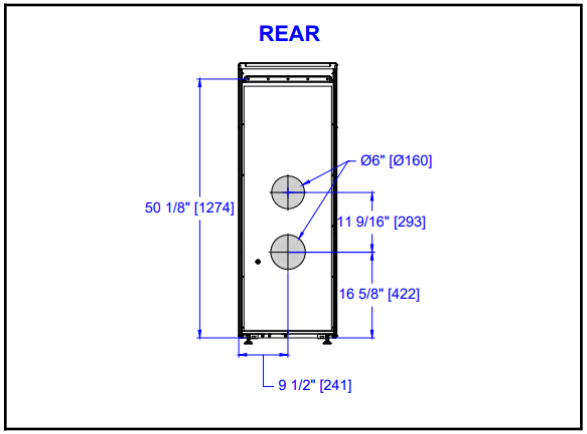

8. WARRANTY

8.1 Basic coverage

- **Parts:** 5 years from delivery.
- **Compressor:** 10 years from delivery.
- **Labor:** 2 years from certification (only if at least 10 units are installed, the site is certified by INNOVA or self-certified, and spare stock equal to 3% of total units is maintained)
- **Controllers:** Covered under a 2-year warranty.

8.2 Optional extended coverage

- **Additional 2-Year Parts & Labor Warranty:** Extends the basic coverage to 4 years labor and 7 years parts.
- **Extended 10-Year Parts Warranty:** Extends parts coverage to 10 years total.
- **Extended 5-Year Full Warranty:** Extends full parts and labor coverage to 5 years total.
- **Extended 10-Year Full Warranty:** Provides a 10-year full warranty on parts, labor, and compressor.
- **Extended 15-Year Full Warranty:** Provides a 15-year full warranty on parts, labor, and compressor.

8.3 Validation requirements

- Installation must be certified by an INNOVA technician or self-certified within 30 days.
- Installers must complete INNOVA training.
- The system must comply with local codes, use approved louvers, and be properly maintained (e.g., clean filters monthly, coils every 18 months).

For warranty service or claims, contact INNOVA Support at vip@innova.co or (212) 204-2700.

For detailed terms and conditions, click the link below:

AIO Warranty Terms and Conditions - 2026 - INN...

9. SUBMITTALS

9.1 115V Heat pump only

AIO® FLOOR STANDING -115V - NO ELECTRIC HEAT STRIP - R32 - SUBMITTAL (AFP10N3H1)

Job	Reference	Construction
Location	Approval	Quote Number
Engineer	Date	Drawing Number
Submitted To	Submitted By	P.O. Number

General Features

- BLDC inverter compressor
- ECM fans
- R32 Refrigerant
- Auto restart
- Intelligent defrost
- No outdoor unit
- Condensate disbursement systems
- Onboard touch controller
- Washable filter
- Electronically controlled air louver
- Compact, slim design
- 3 selectable fan speeds + Auto
- 10-Year limited warranty (after certification)
- Made in Italy

The installing contractor must contact INNOVA Customer Technical Support prior to installation to schedule an installation training overview.

This may be conducted in person or remotely (online). It is the official installation training and may include videos, best practices, and system requirements.

Performing installations without training may result in installation errors, performance issues, and possible warranty limitations.

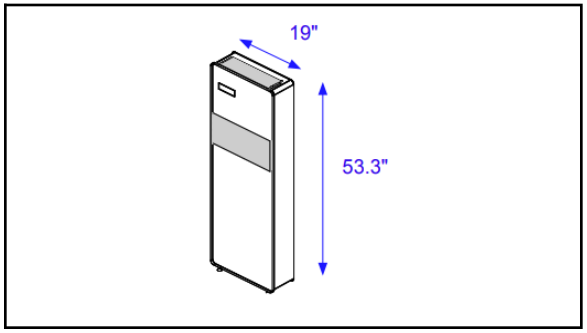

Performance Specifications		
Cooling Capacity (BTU/hr)		7,500
SEER2		13.58
Rev. Cycle Heating Capacity (Btu/h)		7,800
HSPF2		6.96
Circulation	CFM	160 - 235
	m^3/hr	272 - 399
Dehumidification	Pts/h	1.9
	L/hr	0.9

Electric Specifications	
Power Supply (V/Ph/Hz)	115V/1Ph/60Hz
Voltage Range	103 - 127
Running Amps Cooling	7.7
Max Amps Cooling	9.6
Running Amps Heating	5.1
Max Amps Heating	10.4
MCA	13
Maximum Overcurrent Protection (A)	25
Max Power Input (watts) Cooling	1,630
Max Power Input (watts) Heating	1,630

Included	Wall Controllers + Gateways	
☐	Wireless Remote	WRCH20
☐	Basic Touch Controller	LTCH20
☐	Recessed Touch Controller	RTCH20
☐	Advanced TFT Controller with 7-Day program	TFTH20
☐	Wireless (AA Battery) Infrared Controller with 7-Day program	WIPT20
☐	Third Party Gateway	TPG015
☐	WiFi App	WIFI30
☐	E-Paper EOS Controller	EEOS12
☐	Simple EOS Controller	SEOS12
☐	Integration gateway for LTCH20, TFTH20 and MODBUS	GWN
☐	Integration gateway for LTCH20, TFTH20, MODBUS, BACnet, and third-party thermostats	GWX

Included	LCDI Power Cords	Amps	NEMA	SKU
☐	72 in. (1829 mm)	None	6-15P	L115v15a

9.2 115V Heat pump + elec heat

AIO® FLOOR STANDING - 115V - 900W HEAT STRIP - R32 - SUBMITTAL (AFE10N3H1)

Job	Reference	Construction
Location	Approval	Quote Number
Engineer	Date	Drawing Number
Submitted To	Submitted By	P.O. Number

General Features

- BLDC inverter compressor
- ECM fans
- R32 Refrigerant
- Auto restart
- Intelligent defrost
- No outdoor unit
- Condensate disbursement systems
- Onboard touch controller
- Washable filters
- Electronically controlled air louver
- Compact slim design
- 3 selectable fan speeds + Auto
- 10-Year limited warranty (after certification)
- Made in Italy



The installing contractor must contact INNOVA Customer Technical Support prior to installation to schedule an installation training overview.

This may be conducted in person or remotely (online). It is the official installation training and may include videos, best practices, and system requirements.

Performing installations without training may result in installation errors, performance issues, and possible warranty limitations.

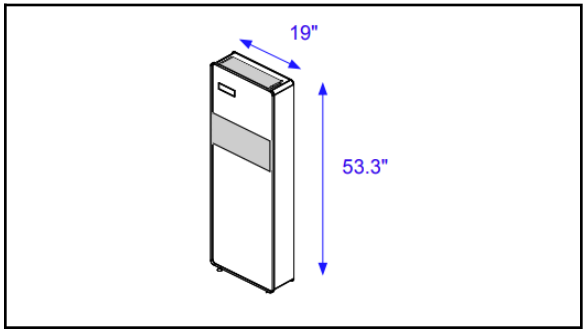

Performance Specifications		
Cooling Capacity (BTU/hr)		7,500
SEER2		13.58
Rev. Cycle Heating Capacity (Btu/h)		7,800
HSPF2		6.96
Circulation	CFM	160 - 235
	m^3/hr	272 - 399
Dehumidification	Pts/h	1.9
	L/hr	0.9

Electric Specifications	
Power Supply (V/Ph/Hz)	115V/1Ph/60Hz
Voltage Range	103 - 127
Running Amps Cooling	7.7
Max Amps Cooling	9.6
Running Amps Heating	5.1
Max Amps Heating	16.3
MCA	21
Maximum Overcurrent Protection (A)	35
Max Power Input (watts) Cooling	1,630
Max Power Input (watts) Heating	1,630

Included	Wall Controllers + Gateways	
☐	Wireless Remote	WRCH20
☐	Basic Touch Controller	LTCH20
☐	Recessed Touch Controller	RTCH20
☐	Advanced TFT Controller with 7-Day program	TFTH20
☐	Wireless (AA Battery) Infrared Controller with 7-Day program	WIPT20
☐	Third Party Gateway	TPG015
☐	WiFi App	WIFI30
☐	E-Paper EOS Controller	EEOS12
☐	Simple EOS Controller	SEOS12
☐	Integration gateway for LTCH20, TFTH20 and MODBUS	GWN
☐	Integration gateway for LTCH20, TFTH20, MODBUS, BACnet, and third-party thermostats	GWX

Included	LCDI Power Cords	Amps	NEMA	SKU
☐	72 in. (1829 mm)	900W	6-15P	L220v15a

9.3 230V Heat pump only

AIO® FLOOR STANDING - 230V - NO HEAT STRIP - R32 - SUBMITTAL (AFP10N3H2)

Job	Reference	Construction
Location	Approval	Quote Number
Engineer	Date	Drawing Number
Submitted To	Submitted By	P.O. Number

General Features

- BLDC inverter compressor
- ECM fans
- R32 Refrigerant
- Auto restart
- Intelligent defrost
- No outdoor unit
- Condensate disbursement systems
- Onboard touch controller
- Washable filters
- Electronically controlled air louver
- Compact slim design
- 3 selectable fan speeds + Auto
- 10-Year limited warranty (after certification)
- Made in Italy

The installing contractor must contact INNOVA Customer Technical Support prior to installation to schedule an installation training overview.

This may be conducted in person or remotely (online). It is the official installation training and may include videos, best practices, and system requirements.

Performing installations without training may result in installation errors, performance issues, and possible warranty limitations.

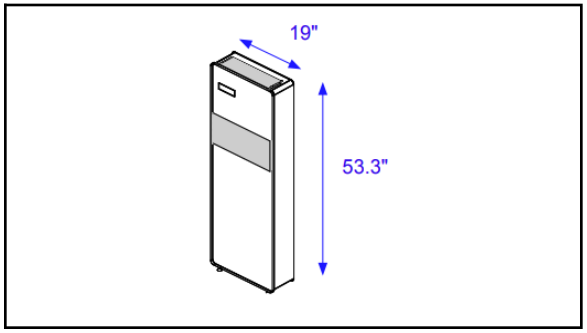

Performance Specifications		
Cooling Capacity (BTU/hr)		7,500
SEER2		13.58
Rev. Cycle Heating Capacity (Btu/h)		7,800
HSPF2		6.96
Circulation	CFM	160 - 235
	m^3/hr	272 - 399
Dehumidification	Pts/h	1.9
	L/hr	0.9

Electric Specifications	
Power Supply (V/Ph/Hz)	230V/1Ph/60Hz
Voltage Range	180-253
Running Amps Cooling	3.8
Max Amps Cooling	4.8
Running Amps Heating	2.6
Max Amps Heating	5.2
MCA	6
Maximum Overcurrent Protection (A)	15
Max Power Input (watts) Cooling	1,630
Max Power Input (watts) Heating	2,530

Included	Wall Controllers + Gateways	
☐	Wireless Remote	WRCH20
☐	Basic Touch Controller	LTCH20
☐	Recessed Touch Controller	RTCH20
☐	Advanced TFT Controller with 7-Day program	TFTH20
☐	Wireless (AA Battery) Infrared Controller with 7-Day program	WIPT20
☐	Third Party Gateway	TPG015
☐	WiFi App	WIFI30
☐	E-Paper EOS Controller	EEOS12
☐	Simple EOS Controller	SEOS12
☐	Integration gateway for LTCH20, TFTH20 and MODBUS	GWN
☐	Integration gateway for LTCH20, TFTH20, MODBUS, BACnet, and third-party thermostats	GWX

Included	LCDI Power Cords	Amps	NEMA	SKU
☐	72 in. (1829 mm)	None	6-15P	L220v15a

9.4 230V Heat pump + elec heat

AIO® FLOOR STANDING -230V - 900W HEAT STRIP - R32 -SUBMITTAL (AFE10N3H2)

Job	Reference	Construction
Location	Approval	Quote Number
Engineer	Date	Drawing Number
Submitted To	Submitted By	P.O. Number

General Features

- BLDC inverter compressor
- ECM fans
- R32 Refrigerant
- Auto restart
- Intelligent defrost
- No outdoor unit
- Condensate disbursement systems
- Onboard touch controller
- Washable filters
- Electronically controlled air louver
- Compact slim design
- 3 selectable fan speeds + Auto
- 10-Year limited warranty (after certification)
- Made in Italy

The installing contractor must contact INNOVA Customer Technical Support prior to installation to schedule an installation training overview.

This may be conducted in person or remotely (online). It is the official installation training and may include videos, best practices, and system requirements.

Performing installations without training may result in installation errors, performance issues, and possible warranty limitations.

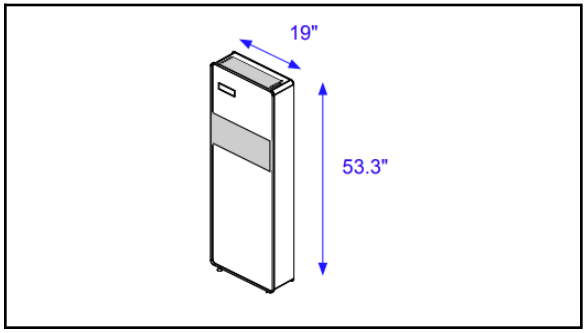

Performance Specifications		
Cooling Capacity (BTU/hr)		7,500
SEER2		13.58
Rev. Cycle Heating Capacity (Btu/h)		7,800
HSPF2		6.96
Circulation	CFM	160 - 235
	m^3/hr	272 - 399
Dehumidification	Pts/h	1.9
	L/hr	0.9

Electric Specifications	**900W**
Power Supply (V/Ph/Hz)	230V/1Ph/60Hz
Voltage Range	180-253
Running Amps Cooling	3.8
Max Amps Cooling	4.8
Running Amps Heating	2.6
Max Amps Heating	9.1
MCA	14
Maximum Overcurrent Protection (A)	20
Max Power Input (watts) Cooling	1,630
Max Power Input (watts) Heating	2,530

Included	Wall Controllers + Gateways	
☐	Wireless Remote	WRCH20
☐	Basic Touch Controller	LTCH20
☐	Recessed Touch Controller	RTCH20
☐	Advanced TFT Controller with 7-Day program	TFTH20
☐	Wireless (AA Battery) Infrared Controller with 7-Day program	WIPT20
☐	Third Party Gateway	TPG015
☐	WiFi App	WIFI30
☐	E-Paper EOS Controller	EEOS12
☐	Simple EOS Controller	SEOS12
☐	Integration gateway for LTCH20, TFTH20 and MODBUS	GWN
☐	Integration gateway for LTCH20, TFTH20, MODBUS, BACnet, and third-party thermostats	GWX

Included	LCDI Power Cords	Amps	NEMA	SKU
☐	72 in. (1829 mm)	900W/ 1800W	6-15P	L220v15a/ L220v20a

With over 20 years of experience in the climate comfort sector, we have a clear goal: growth through innovation. Our team is laser-focused on the conception, development, and production of innovative heating, ventilation, and air conditioning solutions. This mission has developed through bringing together technical skills, creativity, technology, design, Italian passion, and a global vision to achieve the best energy efficiency and performance.

innova.co | **USA:** 216-710-1000 **Canada:** 416-739-1000

MADE IN ITALY

© 2026 INNOVA. All rights reserved.

Revised September 23, 2026

AIO® Floor Standing **Product Data Sheet**