# AIO® Floor Standing (Gen 2)

Product Data Sheet

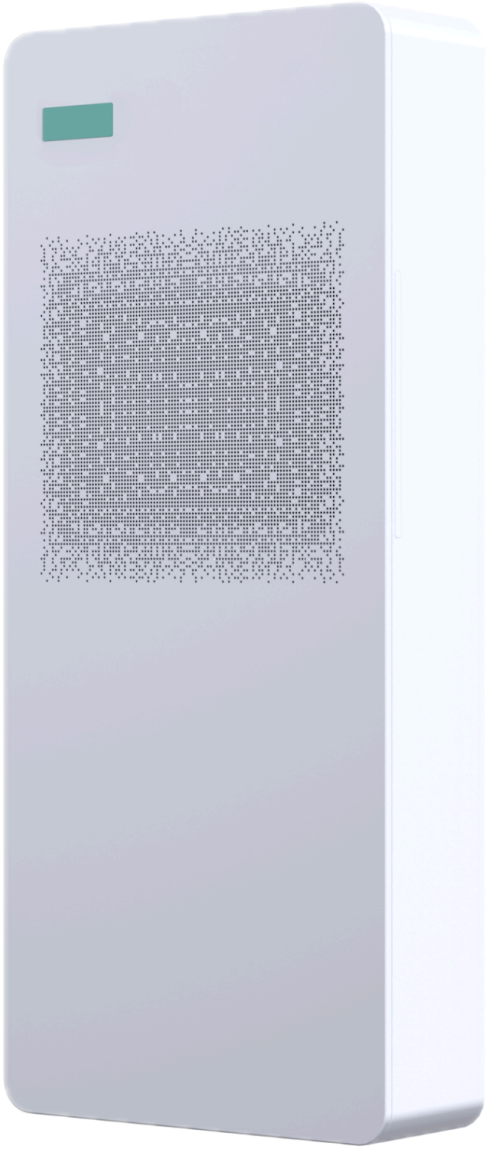

ephoca

## CONTACT INFO

**VIP Customer/Technical Support**
Email: vip@innova.co
Phone: (212) 204-2700

## DISCLAIMER

This documentation is intended for informational use only and should not be construed as a binding representation or contract. This documentation is provided "as is" without warranty of any kind, either express or implied. Ephoca and its affiliates disclaim all liability arising from the use or misuse of this documentation.

The information contained in this documentation is for illustration and example purposes only and may not be relied upon, nor does Ephoca make any warranty or representation in any manner whatsoever. Illustrations may not be to scale, and all information and dimensions stated herein are subject to change at any time at the sole discretion of Ephoca. Benefits described herein apply only to the extent that the product is installed correctly in the correct application and used for its intended purpose.

Ephoca is constantly innovating and improving its products and reserves the right to modify product design and specifications without notice and without incurring any obligations.

## MODEL NUMBER NOMENCLATURE

The code identifies the family, model, version, size, voltage, accessories, refrigerant type, and ERV option. See the diagram below for details.

*Figure 1. AIO® Model Number Nomenclature*

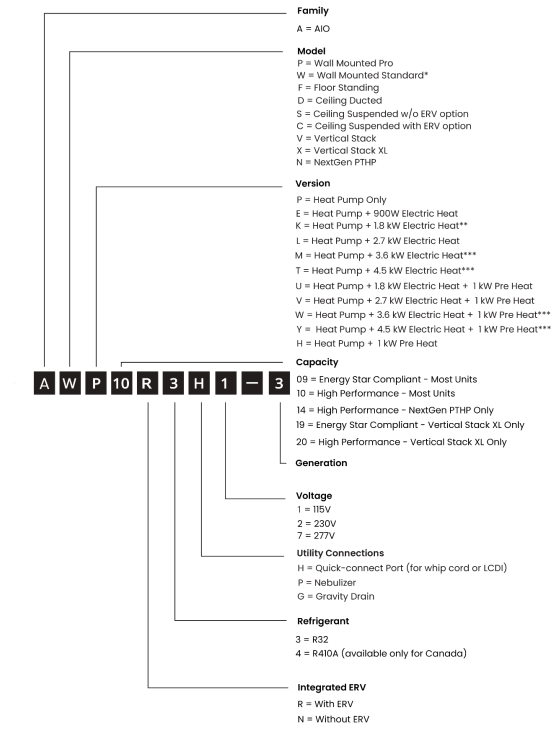


* 8" Vents : Just generation (e.g. = 3)

6" Vents : Generation + SP (e.g. = 3SP)

** Field convertible to 900W

*** AIO® Vertical Stack XL **Only**

Ephoca is the US subsidiary of INNOVA S.r.l -
Via 1° Maggio, 8 – 38089 Storo (TN), Italy.

AIO® is the registered trademark of Ephoca in the United States and other countries.

Copyright © 2026 Ephoca. All rights reserved.

# CONTENTS


**1. READING THIS DOCUMENTATION..... 4**

1.1 Documentation-specific language..... 4

1.2 Annotation icons..... 4

**2. AIO® FLOOR STANDING (GEN 2)..... 4**

**3. KEY FEATURES..... 4**

**4. TECHNICAL REQUIREMENTS..... 5**

4.1 Site requirements..... 5

4.2 Louver specifications..... 6

**5. WHAT'S INSIDE..... 6**

**6. AIRFLOW..... 7**

**7. INSTALLATION..... 7**

**8. CLEARANCE..... 7**

**9. ADDITIONAL CONNECTIONS..... 8**

**10. TECHNICAL DATA..... 8**

10.1 Cooling..... 8

10.2 Heating (Heat Pump Only)..... 8

10.3 Airflow..... 9

10.4 General..... 9

10.5 Sound..... 9

10.6 Dimensions..... 9

10.7 Insulation..... 9

10.8 Electrical..... 9

**11. LOGIC..... 10**

11.1 Post-Heater..... 10

11.2 Post-Heater Modes..... 10

11.3 Dehumidification..... 10

**12. DIMENSIONS..... 11**

**13. WIRING DIAGRAM..... 12**

13.1 115V Heat pump only..... 12

13.2 230V Heat pump only..... 12

13.3 230V Heat pump + electric heat..... 12

**14. MOUNTING TEMPLATE..... 13**

**15. WARRANTY INFORMATION..... 13**

**16. SUBMITTALS..... 14**

16.1 115V Heat pump only..... 14

16.2 115V Heat pump + elec heat..... 15

16.3 230V Heat pump only..... 16

16.4 230V Heat pump + elec heat..... 17

# 1. READING THIS DOCUMENTATION

Some language and symbols in this documentation have specific meanings.

## 1.1 Documentation-specific language

**Reference to the product**
Any reference to "the unit" refers to the AIO® Floor Standing (Gen 2) unit.

**Unit orientation**
All directions in this guide (left, right, top, bottom) are given from the perspective of facing the unit.

## 1.2 Annotation icons

Annotations are provided throughout this guide. It is essential to read each carefully and follow the instructions stated.



Indicates critical information for correct operation or installation.



Indicates supplemental information, tips, or useful background information.

# 2. AIO® FLOOR STANDING (GEN 2)

AIO® Floor Standing units are slim and sleek. The wall-mounted unit can be mounted high or low with a factory-supplied bracket, making installation quick and simple. An electronically controlled louver with an auto-swing function distributes airflow comfortably and uniformly. Wall-mounted units are ideal for any area with free wall space. The onboard touch controller simplifies use and installation. Special adapters enable the unit to be installed perpendicular to an outside wall, used with many louver styles, or even vented through an existing window frame with no construction required.

# 3. KEY FEATURES

**No outdoor unit**
The single package design means no outdoor unit, freeing up space on rooftops and at ground level and enabling installations in buildings without space for an outdoor unit.

**BLDC twin rotary inverter compressor**
The state-of-the-art, twin-rotor Brushless DC (BLDC) inverter compressor operates efficiently, quietly, and with minimal vibration. AIO® is ideal for any room or area that requires between 4,000 and 10,500 BTU.

**High-efficiency ECM fans with auto ESP**
High-efficiency ECM fans enable efficient and quiet operation as the EC motor can ramp up or down depending on the need. Automatically adjusted external static pressure ensures correct airflow.

**Cold climate heat pump**
The heat pump efficiently functions in temperatures as low as 5°F outdoors.

**Optional ERV Module**
The optional ERV module enables make-up/fresh air in the most efficient method possible.

**Optional 900-Watt electric heat**
The optional electric heating system operates alongside the heat pump when the latter lacks adequate power. This electric heating setup consists of one 900W heater, strategically staged to optimize efficiency while minimizing the consumption of electric heat. The unit offers configuration options for electric heat usage: it can be set to use no electric heat or 900W electric heat, providing flexibility and energy management capabilities.

**Intelligent defrosting**
AIO®'s intelligent defrosting system means more time heating and less time on reverse cycle defrost.

**Coil cooling system**
The condensate mist system drizzles the condensate on the outdoor heat exchanger coils, lowering the coil's temperature and increasing efficiency and performance.

**Quiet**
With whisper-quiet operation as low as 27 decibels, the occupant will barely notice that AIO® is operating.

**No outside noise infiltration**
AIO® has the lowest STC and OITC rating among comparable units. This means less outside noise intrudes into the room day and night.

**Versatile on/off options**
AIO® supports integration with dry contact devices (voltage-free switch inputs used to control the unit's operation). These may include occupancy sensors, open-window switches, on/off remotes, or other compatible control systems. When used, these devices can automatically activate or deactivate the unit as needed.

**Minimal clearances and compact footprint**
AIO®'s compact form with no line sets means there is no need to access the sides of the unit. Mount units with as little as 3/4 inch clearance on all sides. Compact footprints take up minimum space.

**Leak protection**
A drain alarm will activate if the drain becomes clogged, and the system will be shut off, preventing water damage.

**Easy to service**
AIO® can be easily maintained and repaired from the front and bottom of the unit without having to remove the unit from the wall or ceiling. AIO® can also be quickly swapped out with a replacement, reducing downtime.

**Versatile controls**
AIO® includes an onboard touch controller and an optional iOS and Android app. AIO® can be used with optional wall-mounted controllers, including a TFT with a 7-day program and third-party controllers using the optional 3rd party kit.  An optional BACnet and Modbus module enables interfacing with building management systems.

**10-Year limited warranty**
An industry-leading 10-year limited warranty provides peace of mind.

- Comprehensive onsite two-year parts and labor (after certification).
- 5-year parts warranty.
- 10-year parts warranty on the compressor.
- See Warranty Terms and Conditions for details.

# 4. TECHNICAL REQUIREMENTS

## 4.1 Site requirements

Refer to the installation manual for complete installation requirements and specifications.

- Where practical, avoid installing the unit in a location exposed to direct sunlight. Solar heating may cause the room-air temperature sensor to detect a temperature higher than the actual room temperature, resulting in improper temperature control, unnecessary cooling operation, reduced heating output, and decreased energy efficiency.
- The power supply circuit is installed in accordance with the current edition of NEC (ANSI/NFPA 70) and local codes and ordinances.

- Always consult local and national electrical codes before installing the unit.
- Damage or premature failure of the quoted equipment resulting from improper voltage conditions, inadequate electrical service, or operating the equipment with excessive THD (Total Harmonic Distortion) levels will void the Manufacturer's warranty.

- Do not operate the unit in or near a construction or renovation site. Dust and debris can enter the unit, causing malfunctions and reduced performance.
- If the unit must be operated during construction or renovation, the air filters and accessible coil surfaces must be inspected and cleaned daily before operation.
- Failure to perform daily cleaning during construction use may result in damage and will void the warranty.

- Voltage rating of 60 Hz, single phase in 115V or 208/230V in accordance with the model specified.
- Minimum interior clearances are as follows:
  - Front of unit to any obstructions: 30"
  - Sides of unit to wall: 1"
  - Top of unit to any obstruction: 3.5"
  - Back of the fan to an external louver: 2"
- Unblocked vents on the exterior and no obstacles within 36".
- An internal drain is highly recommended.
- If using an externally run condensate line:
  - The line must be properly insulated.
  - The line must have a minimum of 2% slope.

## 4.2 Louver specifications

AIO® Floor Standing units can be vented through all kinds of custom and creative solutions. The possibilities are endless, from perforated panels to custom louvers.

There are two critical factors in selecting and sizing a solution that will work with AIO® Floor Standing units.

- **Free area:** This area on a louver/grille is open for the air to flow through. The louver, perforated panel, or other solution must have at least the amount of free area as required in the specifications below in the plenum from the unit, so that ample air can enter and exit the condenser chamber. A more restrictive solution with a smaller free area can be utilized by enlarging the louver and plenum until the required free area is achieved.

  **The minimum required free area is .21 square feet for the intake vent and .21 square feet for the exhaust vent.**
- **Pressure drop:** Pressure drop is the resistance the louver/grille creates against the airflow. This resistance can create heat build-up inside the condenser portion, causing the compressor to overheat and shut down. A solution with a higher pressure drop than specified can be utilized by enlarging the louver and plenum until the pressure drop is within specification. **The maximum total pressure for the intake and exhaust louvers combined must be under 0.25" WC (62.3 Pa).**

Any louver must meet these requirements, as exceeding these limits can cause the unit to overheat and fail, and void the warranty.

The following louvers are approved for AIO® Floor Standing:

- **Sunvent:** LLA/C, LLA/M, LLA/s - available through your Ephoca distributor.
- **Thermaduct:** RLA6 - available through your Ephoca distributor.
- **Primex:** WCL8, WC6, WC8 - available online and in stores.
- **Dundas Jaffine:** IH6WXZ - available online and in stores.

# 5. WHAT'S INSIDE

*Figure 2. What's Inside*

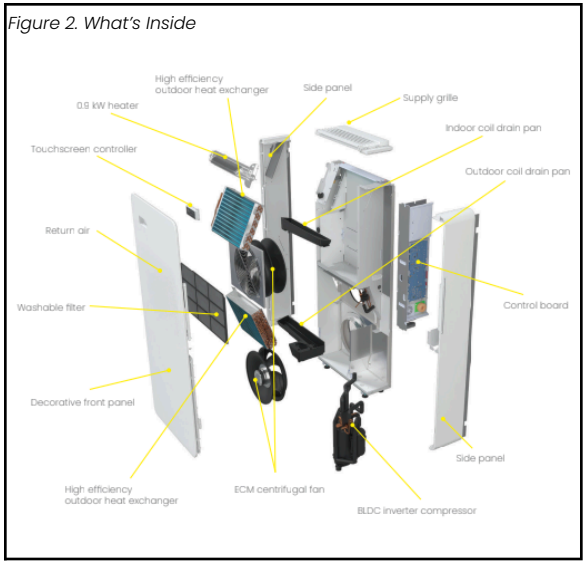

## 6. AIRFLOW

- **Supply air**
  Air is supplied through an electronically controlled louver that can be set at any angle or oscillate continuously.
- **Return air**
  The return air is on the top of the unit through the integrated return air grille.
- **Outside air intake**
  The 6-inch outside air intake connection works with any of the approved or custom louvers, as long as they comply with the minimum requirements. See TECHNICAL REQUIREMENTS.
- **Outside air exhaust**
  The 6-inch round outside air exhaust connection works with any of the approved or custom louvers, as long as they comply with the minimum requirements. See TECHNICAL REQUIREMENTS.

*Figure 3. Airflow*

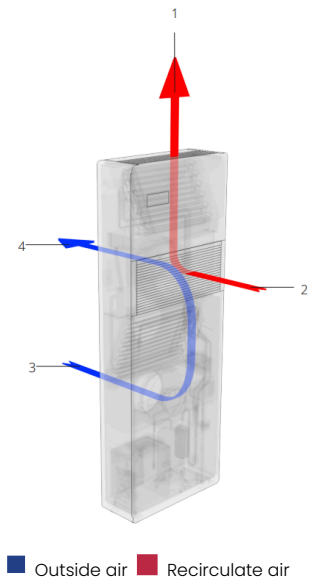


| | | | |
|---|---|---|---|
| **1** | Supply air | **3** | Outside air intake |
| **2** | Room return air | **4** | Exhaust |

## 7. INSTALLATION

*Figure 4.*



## 8. CLEARANCE

The clearances for the AIO® Floor Standing unit are shown in the figure. Clearances are required for proper airflow, maintenance, and cleaning.

- **Sides**
  A minimum of 2.5" clearance should be maintained on each side of the unit.
- **Top**
  A minimum of 4" clearance should be maintained at the top of the unit for proper airflow.

*Figure 5. Side and Top Clearances*

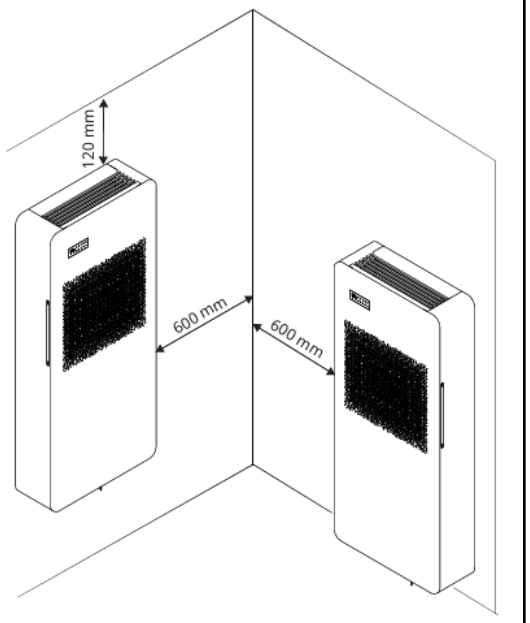


*Figure 6. Front Clearance*

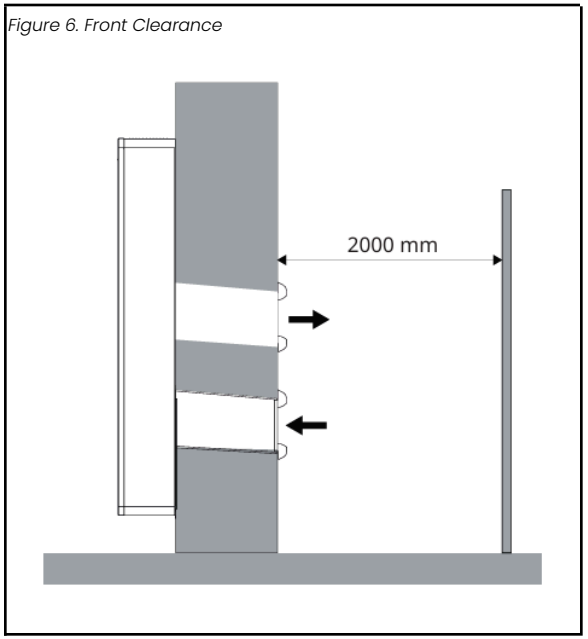


## 9. ADDITIONAL CONNECTIONS

AIO® Floor Standing offers a group of connections located at the bottom-right corner on the back of the unit (as viewed when facing the mounted unit) to enable quick and easy connection to accessories and components. These include the following:

- **Heat Trace Power**
  When installing a condensate line that is draining directly outside, in cold climates, we highly recommend using a heat trace line.
- **ERV**
  When connecting the AIO® ERV, these ports allow quick connections to the power and communications for the ERV.
- **Controller Gateways**
  All Controller Gateway connections (used to interface with the Third Party Gateway, Advanced Touch Controller, Basic Touch Controller, BACnet, Modbus, and other controllers) are located behind the right decorative panel of the unit. For installation instructions, refer to the relevant documentation for each controller.

*Figure 7. Additional Connections*

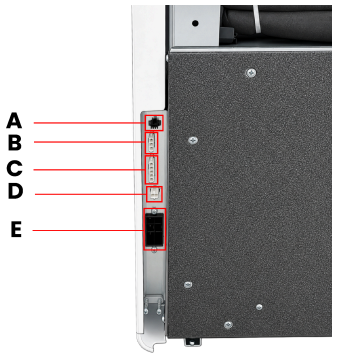


| | | | |
|---|---|---|---|
| **A** | ECM axial condenser fan | **D** | Power for heat trace on condensate line/Nebulizer |
| **B** | Power for ERV/Nebulizer | **E** | Quick-connect line power |
| **C** | ERV communication | | |

# 10. TECHNICAL DATA

## 10.1 Cooling

*Table 1. Cooling*

| **Heat Pump** | | **95°F** (1) | **105°F** (2) | **115°F** (3) |
|---|---|---|---|---|
| Maximum* | BTU/hr | 9,700 | 8,000 | 7,500 |
| Nominal | | 9,300 | 7,400 | 7,100 |
| Minimum | | 3,900 | 3,300 | 4,300 |
| Input Power | W | 1,020 | 940 | 982 |
| Efficiency | EER2 | 9.1 | 8.17 | 7.23 |
| Moisture Removal | Pts/h | 1.7 | 2.1 | 2.3 |

**Notes**

(1) ID: 80°F(26.7°C), W.B. 67°F(19.4°C) | OD: 95°F(35°C), W.B. 75°F(23.9°C)

(2) ID: 80°F(26.7°C), W.B. 67°F(19.4°C) | OD: 105°F(40.6°C), W.B. 75°F(23.9°C)

(3) ID: 80°F(26.7°C), W.B. 67°F(19.4°C) | OD: 115°F(46.1°C), W.B. 75°F(23.9°C)

## 10.2 Heating (Heat Pump Only)

*Table 2. Heating*

| **Heat Pump** | | **47°F** (1) | **17°F** (2) | **5°F** (3) | **0°F** (4) | **-5°F** (5) |
|---|---|---|---|---|---|---|
| Maximum* | BTU/hr | 9,900 | 6,400 | 6,000 | 5,700 | 5,300 |
| Nominal | | 9,200 | 5,500 | 5,500 | 5,100 | 4,900 |
| Minimum | | 3,900 | 3,000 | 3,000 | 3,000 | 3,000 |
| Input | W | 770 | 810 | 1,100 | 1,150 | 1,200 |
| Efficiency | COP | 3.5 | 2.0 | 1.4 | 1.3 | 1.2 |

**Notes**

(1) ID: 70°F(21.1°C), W.B. 60°F(15.6°C) | OD: 47°F(8.3°C), W.B. 43°F(6.1°C)

(2) ID: 70°F(21.1°C), W.B. 60°F(15.6°C) | OD: 17°F(-8.3°C), W.B. 13°F(-10.6°C)

(3) ID: 70°F(21.1°C), W.B. 60°F(15.6°C) | OD: 5°F(-15°C), W.B. 3°F(-16.1°C)

(4) ID: 70°F(21.1°C), W.B. 60°F(15.6°C) | OD: 0°F(-17.8°C)

(5) ID: 70°F(21.1°C), W.B. 60°F(15.6°C) | OD: -5°F(-20.6°C)

Maximum capacity is not intended for design specifications. It represents temporary operation only, such as when outdoor temperatures exceed design conditions or when the room load is higher than design due to added occupants. Because it does not reflect normal unit performance, the AIO® unit can operate above its rated capacity for no more than 30 minutes at a time.

## 10.3 Airflow

*Table 3. Airflow*

| **Supply air volume** | | |
|---|---|---|
| Indoor | Type | ECM Centrifugal |
| | CFM | 165 - 294 |
| | Supply connection | Integrated |
| | Return connection | Integrated |
| | Speeds | Low, med, high, auto, boost |
| | Filter | MERV 3 |
| Outdoor | Type | ECM Centrifugal |
| | CFM | 188 - 412 |
| | Available ESP | 0.25" WC (62.3 Pa) |
| | Intake and exhaust connection | 8" round |

## 10.4 General

*Table 4. General*

| **Compressor** | | |
|---|---|---|
| Type | BLDC twin rotary inverter | |
| Refrigerant | Type | R32 |
| | Quantity | 20.11 oz. |
| Oil Type | Fv50s (ISO 50) Polyvinylether (PVE) | |
| **Controls** | | |
| Basic functionality | Dependent on the controller | |
| WiFi | Optional module available | |
| Dry contact | Yes | |
| **Modes** | | |
| Operation | Cool, heat, dehumidify, auto, fan only | |
| Restricted modes | Heat only, cool only, temperature limiting | |
| Timers | Dependent on the controller | |
| **Condensate** | | |
| Pipe size | 3/4" (19 mm) Outside diameter | |
| Pipe material | Rubber | |

## 10.5 Sound

*Table 5. Sound*

| **Sound** | | |
|---|---|---|
| Indoor | dB(A) | 27-41 |
| | STC | 37 |
| | OITC | 28 |
| Outdoor | dB(A) | 28-52 |

## 10.6 Dimensions

*Table 6. Dimensions*

| **Physical data** | | | |
|---|---|---|---|
| Dimensions | | in | 22.83 W x 52.36 H x 8.07 D |
| | | mm | 580 W x 1,330 H x 205 D |
| | Wall hole diameter | in | 8 |
| | | mm | 202 |
| | Wall holes distance | in | 11.5 |
| | | mm | 293 |
| Weight | Net | lb | 139 |
| | | kg | 63 |
| | Gross | lb | 143 |
| | | kg | 65 |
| Cabinet | Finish | | RAL 9003 signal white |
| | Material | | Steel |

In accordance with UL 60335-2-40, motor compressor ratings for Rated Load Amps (RLA) and Locked Rotor Amps (LRA) are determined according to Annex 101.DVB. For motor-compressors controlled by an adjustable speed drive, RLA and LRA shall be replaced with the rated input current of the power conversion equipment.

## 10.7 Insulation

*Table 7. Insulation*

| | |
|---|---|
| Thermal conductivity at 50°F | |
| Thermal conductivity at 10°C | |

Insulation R-value is determined by dividing the insulation thickness by the thermal conductivity (k-value). Insulation thickness varies by component and configuration.

*Figure 8. Insulation Thickness*

## 10.8 Electrical

*Table 8. Electrical - General*

| **General** | | **115V** | **230V** |
|---|---|---|---|
| Volt range | | 103 - 127 | 180-253 |
| Hz/phase | | 60 Hz/single phase | |
| Power supply | | LDCI power cord or hardwire | |
| Power factor | | 0.96 | |
| Input power (standby) | W | 10.8 | |
| Input power (off mode) | | 1.5 | |
| Cooling (nominal) | A | 7.7 | 3.8 |
| Cooling (max) | | 9.6 | 4.8 |
| **Heat Pump Only** | | | |
| Heating - heat pump only (nom.) | A | 5.1 | 2.6 |
| Heating - heat pump only (max) | | 10.4 | 5.2 |
| **Heat Pump + Elec Heat** | | | |

| General | | | 115V | 230V |
|---|---|---|---|---|
| Heating - heat pump +900 W Elec Heat (nom.) | | A | 12.9 | 6.5 |
| Heating - heat pump +900 W Elec Heat (max) | | | 18.2 | 9.1 |

In accordance with UL 60335-2-40, motor compressor ratings for Rated Load Amps (RLA) and Locked Rotor Amps (LRA) are determined according to Annex 101.DVB. For motor-compressors controlled by an adjustable speed drive, RLA and LRA shall be replaced with the rated input current of the power conversion equipment.

*Table 9. Electrical - Motors*

| Motors | | | 115V | 230V |
|---|---|---|---|---|
| Compressor | RLA | A | 7.9 | 3.9 |
| | LRA | | 7.9 | 3.9 |
| Indoor ECM fan motor | Watts (max) | W | 50 | |
| | FLA | A | 0.4 | 0.3 |
| | Power | HP | 0.07 | |
| Outdoor ECM fan motor | Watts (max) | W | 90 | |
| | FLA | A | 0.8 | 0.4 |
| | Power | HP | 0.12 | |

*Table 10. Electrical - LCDI Power cords*

| LCDI Power Cord | | 115V | 230V |
|---|---|---|---|
| Heat Pump Only | Amps | 20 | 15 |
| | Plug Type | 5-20P | 6-15P |
| Heat Pump + 900 W Elec Heat | Amps | - | 15 |
| | Plug Type | - | 6-15P |

*Table 11. Electrical -Circuit Breakers*

| Circuit breakers | | | 115V | 230V |
|---|---|---|---|---|
| Heat Pump Only | MCA | A | 13 | 7 |
| | Recommended breaker size | | 15 | 15 |
| | MOCP | | 25 | 15 |

| Circuit breakers | | | 115V | 230V |
|---|---|---|---|---|
| Heat Pump + 900 W Elec Heat | MCA | A | 23 | 14 |
| | Recommended breaker size | | 25 | 15 |
| | MOCP | | 35 | 20 |

# 11. LOGIC

## 11.1 Post-Heater

The optional post-heater operates to assist or substitute the heat pump during heating mode. For the post-heater to operate, all of the following safety conditions must be met:

- The indoor air temperature probe operates correctly
- The indoor coil temperature probe operates correctly
- The post-heater temperature probe is connected and operates correctly
- The indoor fan operates correctly.

If any of these safety conditions are not met, the post-heater will not activate or will shut off if already operating.

## 11.2 Post-Heater Modes

When the unit is equipped with the optional post-heater, different modes of operation are available.

**rE: Post-Heater Integration**
In this mode, the post-heater operates together with the heat pump when additional heating is required. Provided the safety conditions are met, the post-heater activates when all of the following conditions are met:

- The compressor has been running for at least 30 seconds
- The indoor coil temperature is below 111.2°F (44°C)
- The room temperature is at least 3.6°F (2°C) below the setpoint
- The post-heater has been off for at least 180 seconds
- The room temperature is below 77°F (25°C).

The post-heater shuts off when the indoor coil temperature exceeds 116.6°F (47°C), the room temperature exceeds the setpoint, or the room temperature exceeds 77°F (25°C).

**rH: Complete Heat Pump Bypass**
In this mode, the heat pump is never used for heating, and all heating is provided exclusively by the post-heater. Provided the safety conditions are met, the post-heater activates when the room temperature is 1.8°F (1°C) below the setpoint and shuts off when the room temperature rises 1.8°F (1°C) above the setpoint.

**rT: Post-Heater Integration with Heat Pump Bypass**
In this mode, the post-heater operates with the heat pump, but the unit can temporarily bypass the heat pump in very low outdoor temperatures. If the outdoor temperature remains below 14°F (-10°C) for at least 15 minutes, the heat pump is disabled, and heating is provided only by the post-heater. The heat pump is re-enabled once the outdoor temperature rises above 23°F (-5°C). When the heat pump is active, the same activation logic as rE mode is used. When operating with post-heater-only heating, the same activation logic as rH mode is used.

**Night Mode**
In this mode, heating is done exclusively by the post-heater regardless of the selected heating mode. Provided the safety conditions are met, the post-heater activates when the room temperature is 1.8°F (1°C) below the setpoint, the room temperature is below 82.4°F (28°C), and the post-heater has been off for at least 180 seconds. The post-heater shuts off when the room temperature rises 1.8°F (1°C) above the setpoint or exceeds 82.4°F (28°C).

## 11.3 Dehumidification

The dehumidification mode reduces room humidity while limiting excessive cooling of the conditioned space. If the room temperature is above 78.8°F (26°C) and the temperature setpoint is at least 5.4°F (3°C) lower than the measured room temperature, the unit operates in normal cooling mode. If the room temperature is above 68°F (20°C), the compressor operates at a fixed frequency corresponding to the cooling medium frequency. If the room temperature is above 59°F (15°C), the compressor operates at a fixed frequency corresponding to the cooling low frequency. If the room temperature is below 59°F (15°C), dehumidification mode is disabled.

In all cases, the indoor fan operates at low speed, but it may temporarily increase its speed to protect the indoor coil from excessively low temperatures. A minimum 30-minute delay is applied between operating stage changes for improved stability. These functions are only available on units equipped with the optional post-heater.

## 12. DIMENSIONS

To view the dimensions of the AIO® Floor Standing unit as a high-resolution PDF, click the link below:

AIO Floor Standing Gen 2 Dimensions.pdf

*Figure 9. Unit Dimensions (Front View)*

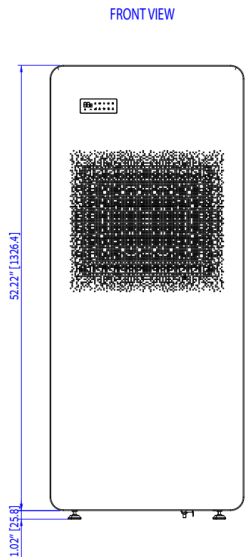


*Figure 10. Unit Dimensions (Top View)*

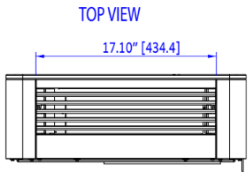


*Figure 11. Unit Dimensions (Side View)*

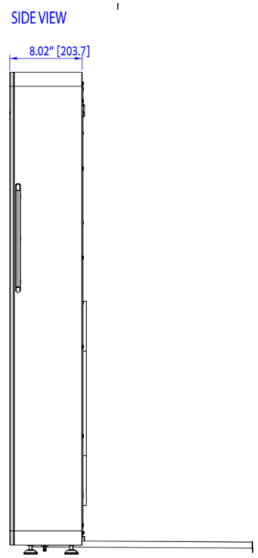


*Figure 12. Unit Dimensions (Rear View)*

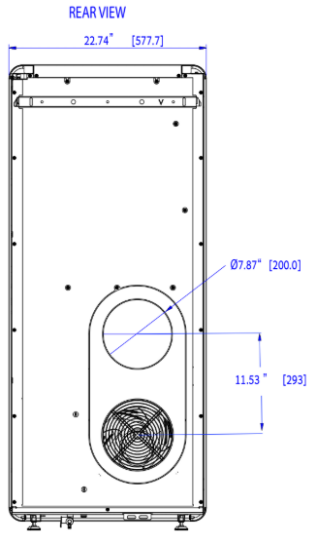


## 13. WIRING DIAGRAM

### 13.1 115V Heat pump only

To view the diagram as a high-resolution PDF, click the link below:

*Figure 13. Floor Standing 115V*

## 13.2 230V Heat pump only

To view the diagram as a high-resolution PDF, click the link below:

*Figure 14. Floor Standing 230V*

## 13.3 230V Heat pump + electric heat

To view the diagram as a high-resolution PDF, click the link below:

*Figure 15. Floor Standing 230V with electric heat*

*Table 12. Electric Heat Parts*

| Electric Heat Parts | | |
|---|---|---|
| **P7** | Description | Compressor cables + discharge temperature sensor |
| | Ephoca Code | N576205A_05 |
| | Note | Included in N576205A |
| **P8** | Description | PE IntPCB |
| | Ephoca Code | N576205A_06 |
| | Note | Included in N576205A |
| **P9** | Description | Kit wiring heating elements |
| | Ephoca Code | N576205A_07 |
| | Note | Included in N576205A |
| **P10** | Description | Display cable |
| | Ephoca Code | N576205A_08 |
| | Note | Included in N576205A |
| **P11** | Description | PE filter wiring diagram |
| | Ephoca Code | N576205A_09 |
| | Note | Included in N576205A |
| **P12** | Description | Transfer cables wiring diagram |
| | Ephoca Code | N576205A._10 |
| | Note | Included in N576205A |
| **P13** | Description | Power supply to IntPCB |
| | Ephoca Code | N576205A_11 |
| | Note | Included in N576205A |
| **P14** | Description | Power cable with USA 2.0 NC connector |
| | Ephoca Code | N500399A |
| **P15** | Description | Power supply to IntPCB |
| | Ephoca Code | N500400A |
| **P16** | Description | Power + R$485 cable for ERV 2.0NC |
| | Ephoca Code | N500403A |
| **P17** | Description | WI-FI Expansion 2.0/WLH |
| | Ephoca Code | N540217A |
| **P18** | Description | Internal Fan |
| | Ephoca Code | N276300B |
| **P19** | Description | Display |
| | Ephoca Code | N570177A |
| **P20** | Description | Flap motor |
| | Ephoca Code | N276300B |
| **P21** | Description | Drain thermo actuator |
| | Ephoca Code | N276417A |
| **P22** | Description | Heating element kit |
| | Ephoca Code | N560043B |
| | Note | 230V version |
| **P23** | Description | 4-way valve |
| | Ephoca Code | N276916A |
| | Note | 230V version |
| **P24** | Description | Drain pump |
| | Ephoca Code | N640019A |
| | Note | 230V version |
| **P25** | Description | PFC Reactor |

| Electric Heat Parts | | |
|---|---|---|
| | Ephoca Code | N579099A |
| | Note | 230V version |
| **P26** | Description | External mixed flow fan |
| | Ephoca Code | N520227A |
| **P27** | Description | External fan cable from IntPCB to base |
| | Ephoca Code | N500398A |
| **P28** | Description | Tubular heating element 2x900w-230V |
| | Ephoca Code | N560506A |
| **P29** | Description | 187.25K ohm Copper probe L =300mm |
| | Ephoca Code | N500321A |

## 14. MOUNTING TEMPLATE

To view or download the template as a high-quality PDF, click the link below:

AIO Floor Standing Gen 2 Mounting Template.pdf

*Figure 16. Mounting template*

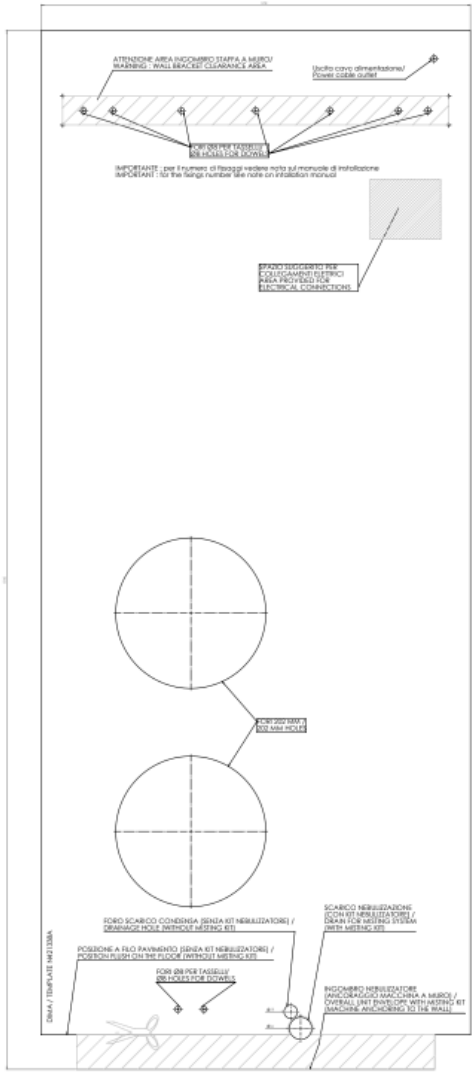

## 15. WARRANTY INFORMATION

For detailed terms and conditions, click on the link below:

AIO Warranty Terms and Conditions - 2026 - Eph...

# 16. SUBMITTALS

## 16.1 115V Heat pump only

AIO® FLOOR STANDING -115V - NO ELECTRIC HEAT STRIP - R32 - SUBMITTAL ()

| | | |
|---|---|---|
| Job | Reference | Construction |
| Location | Approval | Quote Number |
| Engineer | Date | Drawing Number |
| Submitted To | Submitted By: | P.O. Number: |

**General Features**

- BLDC inverter compressor
- ECM fans
- R32 Refrigerant
- Auto restart
- Intelligent defrost
- No outdoor unit
- Condensate disbursement systems
- Onboard touch controller
- Washable filter
- Electronically controlled air louver
- Compact, slim design
- 3 selectable fan speeds + Auto
- 10-Year limited warranty (after certification)
- Made in Italy

The installing contractor must contact Ephoca Customer Technical Support prior to installation to schedule an installation training overview.

This may be conducted in person or remotely (online). It is the official installation training and may include videos, best practices, and system requirements.

Performing installations without training may result in installation errors, performance issues, and possible warranty limitations.

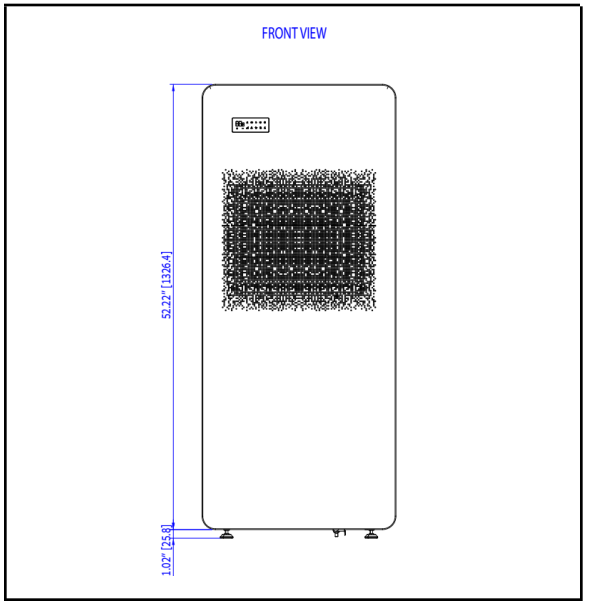


| Performance Specifications | | |
|---|---|---|
| Cooling Capacity (BTU/hr) | | 3,900 - 9,700 |
| SEER2 | | 13.58 |
| Rev. Cycle Heating Capacity (Btu/h) | | 3,900 - 9,900 |
| HSPF2 | | 6.96 |
| Circulation | CFM | 165 - 294 |
| | $m^3/hr$ | 280 - 499 |
| Dehumidification | Pts/h | 1.7 |
| | L/hr | 0.8 |

| Electric Specifications | |
|---|---|
| Power Supply (V/Ph/Hz) | 115V/1Ph/60Hz |
| Voltage Range | 103 - 127 |
| Running Amps Cooling | 7.7 |
| Max Amps Cooling | 9.6 |

| | |
|---|---|
| Running Amps Heating | 5.1 |
| Max Amps Heating | 10.4 |
| MCA | 13 |
| Maximum Overcurrent Protection (A) | 25 |
| Recommend breaker size | 15 |

| Included | Wall Controllers + Gateways | |
|---|---|---|
| ☐ | Wireless Remote | WRCH20 |
| ☐ | Basic Touch Controller | LTCH20 |
| ☐ | Recessed Touch Controller | RTCH20 |
| ☐ | Advanced TFT Controller with 7-Day program | TFTH20 |
| ☐ | Wireless (AA Battery) Infrared Controller with 7-Day program | WIPT20 |
| ☐ | Third Party Gateway | TPG015 |
| ☐ | WiFi App | WIFI30 |
| ☐ | E-Paper EOS Controller | EEOS12 |
| ☐ | Simple EOS Controller | SEOS12 |
| ☐ | Integration gateway for LTCH20, TFTH20 and MODBUS | GWN |
| ☐ | Integration gateway for LTCH20, TFTH20, MODBUS, BACnet, and third-party thermostats | GWX |

| Included | LCDI Power Cords | Amps | NEMA | SKU |
|---|---|---|---|---|
| ☐ | 72 in. (1829 mm) | None | 6-15P | L115v15a |

## 16.2 115V Heat pump + elec heat

AIO® FLOOR STANDING - 115V - 900W HEAT STRIP - R32 - SUBMITTAL ()

| | | |
|---|---|---|
| Job | Reference | Construction |
| Location | Approval | Quote Number |
| Engineer | Date | Drawing Number |
| Submitted To | Submitted By: | P.O. Number: |

**General Features**

- BLDC inverter compressor
- ECM fans
- R32 Refrigerant
- Auto restart
- Intelligent defrost
- No outdoor unit
- Condensate disbursement systems
- Onboard touch controller
- Washable filters
- Electronically controlled air louver
- Compact slim design
- 3 selectable fan speeds + Auto
- 10-Year limited warranty (after certification)
- Made in Italy

The installing contractor must contact Ephoca Customer Technical Support prior to installation to schedule an installation training overview.

This may be conducted in person or remotely (online). It is the official installation training and may include videos, best practices, and system requirements.

Performing installations without training may result in installation errors, performance issues, and possible warranty limitations.

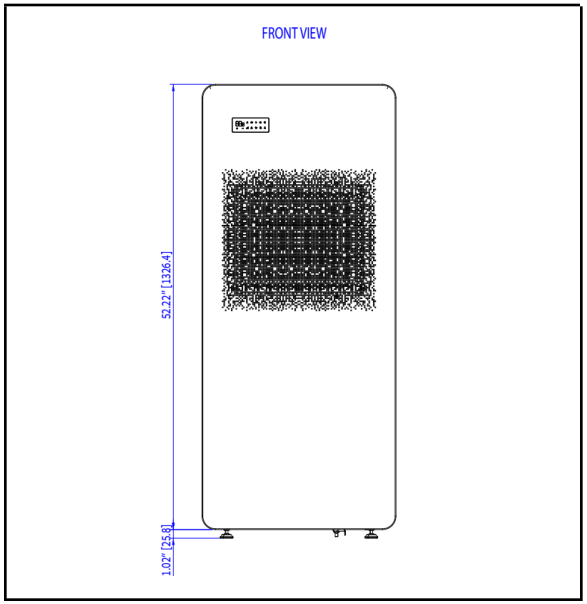


| Performance Specifications | | |
|---|---|---|
| Cooling Capacity (BTU/hr) | | 3,900 - 9,700 |
| SEER2 | | 13.58 |
| Rev. Cycle Heating Capacity (Btu/h) | | 3,900 - 9,900 |
| HSPF2 | | 6.96 |
| Circulation | CFM | 165 - 294 |
| | $m^3/hr$ | 280 - 499 |
| Dehumidification | Pts/h | 1.7 |
| | L/hr | 0.8 |

| Electric Specifications | |
|---|---|
| Power Supply (V/Ph/Hz) | 115V/1Ph/60Hz |
| Voltage Range | 103 - 127 |
| Running Amps Cooling | 7.7 |
| Max Amps Cooling | 9.6 |
| Running Amps Heating | 12.9 |
| Max Amps Heating | 18.2 |
| MCA | 23 |
| Maximum Overcurrent Protection (A) | 35 |
| Recommend breaker size | 25 |

| Included | Wall Controllers + Gateways | |
|---|---|---|
| ☐ | Wireless Remote | WRCH20 |
| ☐ | Basic Touch Controller | LTCH20 |
| ☐ | Recessed Touch Controller | RTCH20 |
| ☐ | Advanced TFT Controller with 7-Day program | TFTH20 |
| ☐ | Wireless (AA Battery) Infrared Controller with 7-Day program | WIPT20 |
| ☐ | Third Party Gateway | TPG015 |
| ☐ | WiFi App | WIFI30 |
| ☐ | E-Paper EOS Controller | EEOS12 |
| ☐ | Simple EOS Controller | SEOS12 |
| ☐ | Integration gateway for LTCH20, TFTH20 and MODBUS | GWN |
| ☐ | Integration gateway for LTCH20, TFTH20, MODBUS, BACnet, and third-party thermostats | GWX |

| Included | LCDI Power Cords | Amps | NEMA | SKU |
|---|---|---|---|---|
| ☐ | | | | |

## 16.3 230V Heat pump only

AIO® FLOOR STANDING - 230V - NO HEAT STRIP - R32 - SUBMITTAL ()

| | | |
|---|---|---|
| Job | Reference | Construction |
| Location | Approval | Quote Number |
| Engineer | Date | Drawing Number |
| Submitted To | Submitted By: | P.O. Number: |

**General Features**

- BLDC inverter compressor
- ECM fans
- R32 Refrigerant
- Auto restart
- Intelligent defrost
- No outdoor unit
- Condensate disbursement systems
- Onboard touch controller
- Washable filters
- Electronically controlled air louver
- Compact slim design
- 3 selectable fan speeds + Auto
- 10-Year limited warranty (after certification)
- Made in Italy

The installing contractor must contact Ephoca Customer Technical Support prior to installation to schedule an installation training overview.

This may be conducted in person or remotely (online). It is the official installation training and may include videos, best practices, and system requirements.

Performing installations without training may result in installation errors, performance issues, and possible warranty limitations.

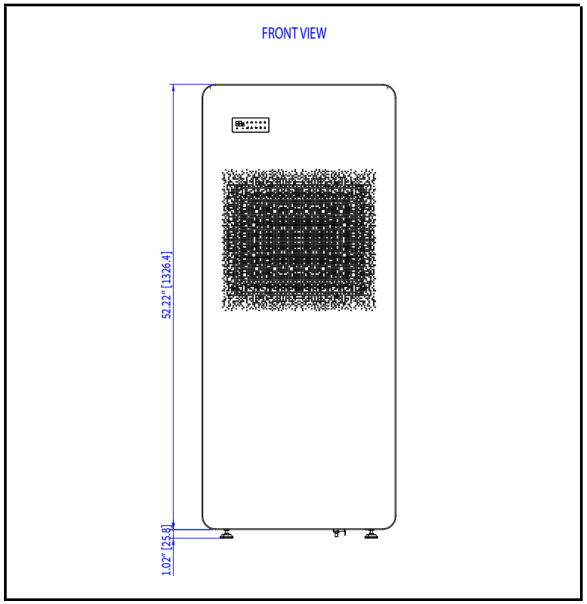


| Performance Specifications | | |
|---|---|---|
| Cooling Capacity (BTU/hr) | | 3,900 - 9,700 |
| SEER2 | | 13.58 |
| Rev. Cycle Heating Capacity (Btu/h) | | 3,900 - 9,900 |
| HSPF2 | | 6.96 |
| Circulation | CFM | 165 - 294 |
| | $m^3/hr$ | 280 - 499 |
| Dehumidification | Pts/h | 1.7 |
| | L/hr | 0.8 |

| Electric Specifications | |
|---|---|
| Power Supply (V/Ph/Hz) | 230V/1Ph/60Hz |
| Voltage Range | 180-253 |
| Running Amps Cooling | 3.8 |
| Max Amps Cooling | 4.8 |
| Running Amps Heating | 2.6 |
| Max Amps Heating | 5.2 |
| MCA | 7 |
| Maximum Overcurrent Protection (A) | 15 |
| Recommend breaker size | 15 |

| Included | Wall Controllers + Gateways | |
|---|---|---|
| ☐ | Wireless Remote | WRCH20 |
| ☐ | Basic Touch Controller | LTCH20 |
| ☐ | Recessed Touch Controller | RTCH20 |
| ☐ | Advanced TFT Controller with 7-Day program | TFTH20 |
| ☐ | Wireless (AA Battery) Infrared Controller with 7-Day program | WIPT20 |
| ☐ | Third Party Gateway | TPG015 |
| ☐ | WiFi App | WIFI30 |
| ☐ | E-Paper EOS Controller | EEOS12 |
| ☐ | Simple EOS Controller | SEOS12 |
| ☐ | Integration gateway for LTCH20, TFTH20 and MODBUS | GWN |
| ☐ | Integration gateway for LTCH20, TFTH20, MODBUS, BACnet, and third-party thermostats | GWX |

| Included | LCDI Power Cords | Amps | NEMA | SKU |
|---|---|---|---|---|
| ☐ | 72 in. (1829 mm) | None | 6-15P | L220v15a |

## 16.4 230V Heat pump + elec heat

AIO® FLOOR STANDING - 230V - 900W HEAT STRIP - R32 - SUBMITTAL ()

| | | |
|---|---|---|
| Job | Reference | Construction |
| Location | Approval | Quote Number |
| Engineer | Date | Drawing Number |
| Submitted To | Submitted By: | P.O. Number: |

**General Features**

- BLDC inverter compressor
- ECM fans
- R32 Refrigerant
- Auto restart
- Intelligent defrost
- No outdoor unit
- Condensate disbursement systems
- Onboard touch controller
- Washable filters
- Electronically controlled air louver
- Compact slim design
- 3 selectable fan speeds + Auto
- 10-Year limited warranty (after certification)
- Made in Italy

The installing contractor must contact Ephoca Customer Technical Support prior to installation to schedule an installation training overview.

This may be conducted in person or remotely (online). It is the official installation training and may include videos, best practices, and system requirements.

Performing installations without training may result in installation errors, performance issues, and possible warranty limitations.

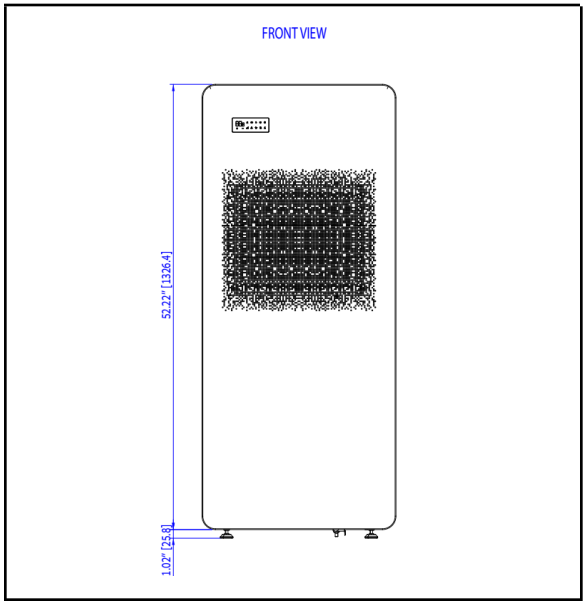


| Performance Specifications | | |
|---|---|---|
| Cooling Capacity (BTU/hr) | | 3,900 - 9,700 |
| SEER2 | | 13.58 |
| Rev. Cycle Heating Capacity (Btu/h) | | 3,900 - 9,900 |
| HSPF2 | | 6.96 |
| Circulation | CFM | 165 - 294 |
| | $m^3/hr$ | 280 - 499 |
| Dehumidification | Pts/h | 1.7 |
| | L/hr | 0.8 |

| Electric Specifications | |
|---|---|
| Power Supply (V/Ph/Hz) | 230V/1Ph/60Hz |
| Voltage Range | 180-253 |
| Running Amps Cooling | 3.8 |
| Max Amps Cooling | 4.8 |
| Running Amps Heating | 6.5 |
| Max Amps Heating | 9.1 |
| MCA | 14 |
| Maximum Overcurrent Protection (A) | 20 |
| Recommend breaker size | 15 |

| Included | Wall Controllers + Gateways | |
|---|---|---|
| ☐ | Wireless Remote | WRCH20 |
| ☐ | Basic Touch Controller | LTCH20 |
| ☐ | Recessed Touch Controller | RTCH20 |
| ☐ | Advanced TFT Controller with 7-Day program | TFTH20 |
| ☐ | Wireless (AA Battery) Infrared Controller with 7-Day program | WIPT20 |
| ☐ | Third Party Gateway | TPG015 |
| ☐ | WiFi App | WIFI30 |
| ☐ | E-Paper EOS Controller | EEOS12 |
| ☐ | Simple EOS Controller | SEOS12 |
| ☐ | Integration gateway for LTCH20, TFTH20 and MODBUS | GWN |
| ☐ | Integration gateway for LTCH20, TFTH20, MODBUS, BACnet, and third-party thermostats | GWX |

| Included | LCDI Power Cords | Amps | NEMA | SKU |
|---|---|---|---|---|
| ☐ | 72 in. (1829 mm) | None | 6-15P | L220v15a |

With over 20 years of experience in the climate comfort sector, we have a clear goal: growth through innovation. Our team is laser-focused on the conception, development, and production of innovative heating, ventilation, and air conditioning solutions. This mission has developed through bringing together technical skills, creativity, technology, design, Italian passion, and a global vision to achieve the best energy efficiency and performance.

Ephoca is the US subsidiary of Innova SRL -
Via 1° Maggio, 8 – 38089 Storo (TN), Italy.

ephoca.com | 216-710-1000

MADE IN ITALY

© 2026 Ephoca. All rights reserved.

Revised August 20, 2026

AIO® Floor Standing (Gen 2) **Product Data Sheet**