AIO® Floor Standing (Gen 2)

Product Data Sheet

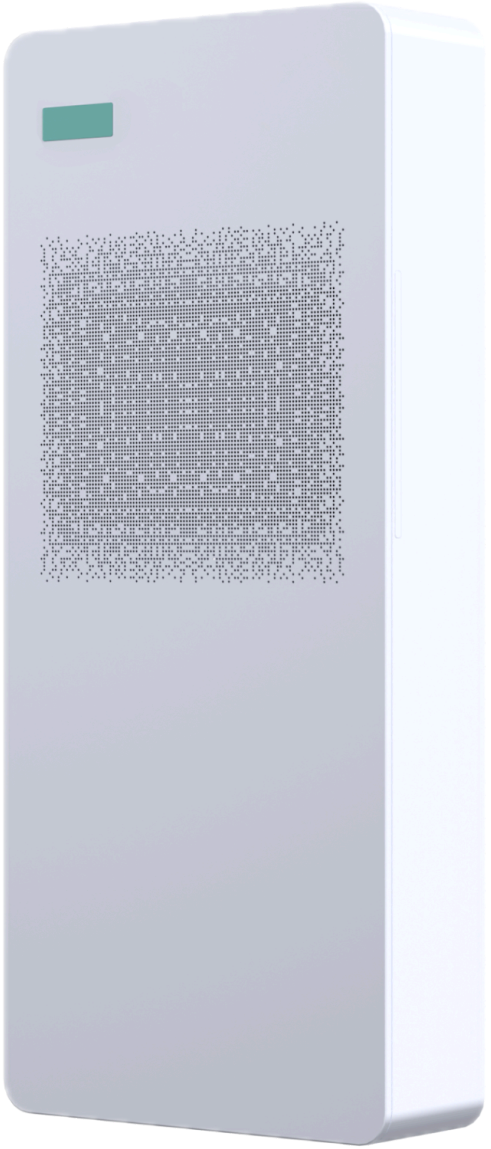

innova

CONTACT INFO

VIP Customer/Technical Support
Email: vip@innova.co
Phone: (212) 204-2700

DISCLAIMER

This documentation is intended for informational use only and should not be construed as a binding representation or contract. This documentation is provided "as is" without warranty of any kind, either express or implied. INNOVA and its affiliates disclaim all liability arising from the use or misuse of this documentation.

The information contained in this documentation is for illustration and example purposes only and may not be relied upon, nor does INNOVA make any warranty or representation in any manner whatsoever. Illustrations may not be to scale, and all information and dimensions stated herein are subject to change at any time at the sole discretion of INNOVA. Benefits described herein apply only to the extent that the product is installed correctly in the correct application and used for its intended purpose.

INNOVA is constantly innovating and improving its products and reserves the right to modify product design and specifications without notice and without incurring any obligations.

MODEL NUMBER NOMENCLATURE

The code identifies the family, model, version, size, voltage, accessories, refrigerant type, and ERV option. See the diagram below for details.

Figure 1. AIO® nomenclature

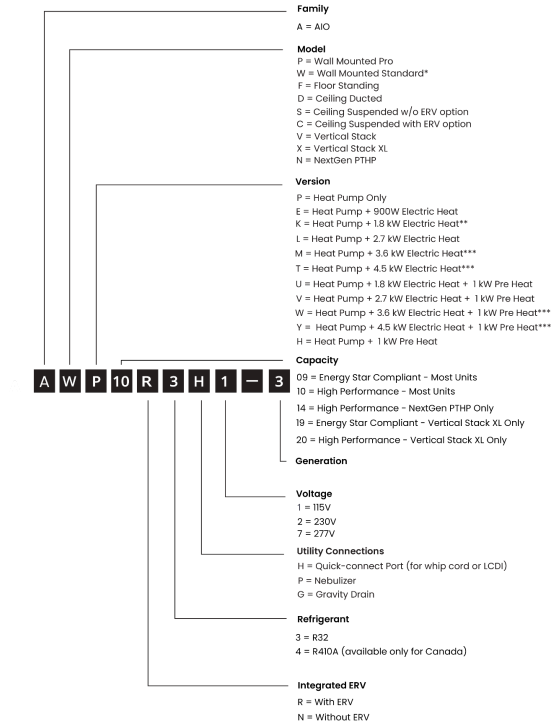

* 8" Vents : Just generation (e.g. = 3)

6" Vents : Generation + SP (e.g. = 3SP)

** Field convertible to 900W

*** AIO® Vertical Stack XL **Only**

AIO® is a registered trademark of INNOVA.
Copyright © 2026 INNOVA. All rights reserved.

CONTENTS

1. READING THIS DOCUMENTATION..... 4

1.1 Documentation-specific language..... 4

1.2 Annotation icons..... 4

2. AIO® FLOOR STANDING (GEN 2)..... 4

2.1 Components and structure..... 4

2.2 Key features..... 4

3. AIRFLOW..... 5

4. INSTALLATION REQUIREMENTS..... 5

4.1 Site requirements..... 5

4.2 Mounting template..... 6

4.3 Outdoor air louver options..... 6

4.4 Clearance requirements..... 6

4.5 Cold climate condensate drain requirement... 7

4.6 Low ambient heating configuration requirement - for AFE10N3H1-2/AFE10N3H2-2 only... 7

5. ADDITIONAL CONNECTIONS..... 7

6. TECHNICAL SPECIFICATIONS..... 8

6.1 Cooling..... 8

6.2 Heating (Heat Pump Only)..... 8

6.3 Airflow..... 8

6.4 General..... 8

6.5 Sound..... 8

6.6 Dimensions..... 8

6.7 Electrical..... 9

7. WIRING DIAGRAM..... 9

7.1 Heat pump only..... 9

7.2 Heat pump + electric heat..... 10

8. DIMENSIONS..... 10

9. WARRANTY INFORMATION..... 11

9.1 Basic coverage..... 11

9.2 Optional extended coverage..... 11

9.3 Validation requirements..... 11

10. SUBMITTALS..... 12

10.1 115V Heat pump only..... 12

10.2 115V Heat pump + elec heat..... 13

10.3 230V Heat pump only..... 14

10.4 230V Heat pump + elec heat..... 15

1. READING THIS DOCUMENTATION

Some language and symbols in this documentation have specific meanings.

1.1 Documentation-specific language

Reference to the product
Any reference to "the unit" refers to the AIO® Floor Standing (Gen 2) unit.

Unit orientation
All directions in this guide (left, right, top, bottom) are given from the perspective of facing the unit.

1.2 Annotation icons

Annotations are provided throughout this guide. It is essential to read each carefully and follow the instructions stated.

Indicates critical information for correct operation or installation.

Indicates supplemental information, tips, or useful background information.

2. AIO® FLOOR STANDING (GEN 2)

AIO® Floor Standing units are slim and sleek. The unit is mounted on the factory-supplied bracket, making installation quick and simple. AIO® Floor Standing units are ideal for any area with free wall space. The onboard touch controller simplifies use and installation. Special adapters enable the unit to be installed perpendicular to an outside wall or to be used with many louver styles with no construction required.

2.1 Components and structure

Figure 2. AIO® Floor Standing components and structure

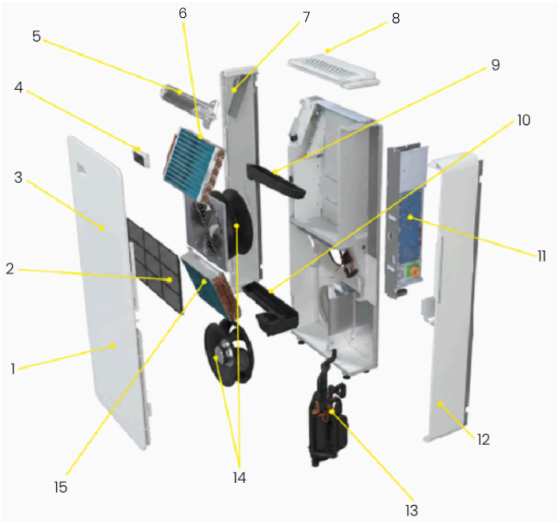

1	Decorative front panel	**9**	Indoor condensate drain pan
2	Washable filter	**10**	Outdoor condensate drain pan
3	Return air	**11**	Electrical control board
4	Onboard touch Controller	**12**	Side panel
5	900 W heater (optional)	**13**	Twin rotary inverter compressor
6	High-efficiency indoor heat exchanger	**14**	ECM centrifugal fan
7	Side panel	**15**	High-efficiency outdoor heat exchanger
8	Supply air vent		

2.2 Key features

No outdoor unit
Single-package design eliminates the need for an outdoor unit, freeing up rooftop and ground space and enabling installation in buildings without access to outdoor equipment.

BLDC twin rotary inverter compressor
Twin-rotor Brushless DC (BLDC) inverter compressor provides efficient, low-noise operation with minimal vibration. The AIO® Floor Standing unit is ideal for any room or area that requires between 2,500 and 10,000 Btu/h of cooling capacity, or between 800 and 11,570 Btu/h of heating capacity.

High-efficiency ECM fans with auto ESP
ECM fans automatically adjust speed to maintain efficient, quiet operation. Auto-adjusting external static pressure (ESP) ensures proper airflow.

Cold climate heat pump
Operates efficiently in outdoor temperatures as low as -5°F (-20°C).

Optional 900-Watt electric resistance heat
Provides supplemental heating when the heat pump capacity is insufficient. This electric heating setup consists of one 900W heater, strategically staged to optimize efficiency while minimizing energy consumption. The unit can be configured with no electric heat or 900 W of electric heat, providing flexibility to match heating needs and energy goals.

Intelligent defrost
Reduces defrost cycle time, maximizing heating operation.

Condensate-assisted coil cooling (disbursement) system
Reuses condensate to cool the outdoor heat exchanger, improving efficiency and performance.

Quiet operation
Sound levels as low as 29 dB(A) for minimal occupant disturbance.

Reduced outdoor noise transmission
STC (37) and OITC (28) ratings help limit external noise entering the space.

Versatile on/off options
AIO® supports integration with dry contact devices (voltage-free switch inputs used to control the unit's operation). These may include occupancy sensors, open-window switches, on/off remotes, or other compatible control systems. When used, these devices can automatically activate or deactivate the unit as needed.

Leak protection
A drain alarm will activate if the drain becomes clogged, and the system will shut off to prevent water damage.

Easy to service
The AIO® unit can be easily maintained and repaired from the front and bottom of the unit without removing it from the wall. The unit can also be quickly swapped out with a replacement, reducing downtime.

Versatile controls
The AIO® unit includes an onboard touch controller and an optional iOS and Android app. The unit can be used with optional wall-mounted controllers, including a TFT with a 7-day program, and third-party controllers via the optional third-party kit. Optional BACnet and Modbus modules enable interfacing with building management systems.

3. AIRFLOW

- **Supply air**
  Air is supplied through a fixed grille located at the top of the unit.
- **Return air**
  The return air is at the front of the unit through the integrated return air grille.
- **Outside air intake**
  The 8-inch (200 mm) outside air intake connection works with approved and custom louvers. See INSTALLATION REQUIREMENTS.
- **Outside air exhaust**
  The 8-inch (200 mm) round outside air exhaust connection works with approved and custom louvers. See INSTALLATION REQUIREMENTS.

Figure 3. Airflow

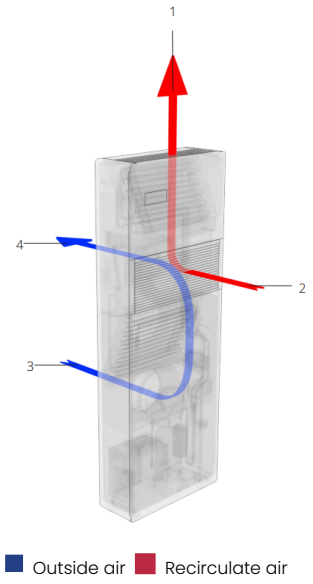

1	Supply air	**3**	Outside air intake
2	Room return air	**4**	Exhaust

4. INSTALLATION REQUIREMENTS

Figure 4. AIO® Floor Standing Installation (See-through view)



4.1 Site requirements

Refer to the installation guide for complete installation requirements and specifications.

- Where practical, avoid installing the unit in a location exposed to direct sunlight. Solar heating may cause the room-air temperature sensor to detect a temperature higher than the actual room temperature, resulting in improper temperature control, unnecessary cooling operation, reduced heating output, and decreased energy efficiency.
- The power supply circuit is installed in accordance with the current edition of NEC (ANSI/NFPA 70) and local codes and ordinances.

- Always consult local and national electrical codes before installing the unit.
- Damage or premature failure of the quoted equipment resulting from improper voltage conditions, inadequate electrical service, or operating the equipment with excessive THD (Total Harmonic Distortion) levels will void the Manufacturer's warranty.
- Do not operate the unit in or near a construction or renovation site. Dust and debris can enter the unit, causing malfunctions and reduced performance.

- Voltage rating of 60 Hz, single-phase, 115V or 208/230V in accordance with the model specified.
- All responsible parties must verify that the electrical supply is properly grounded, free of excessive electrical noise, and within the specified voltage and frequency limits before energizing the unit. Failure to correct power quality issues, including voltage instability or electrical noise, may result in equipment damage and will void the warranty for affected components.
- An internal drain is highly recommended.
- If using an externally run condensate line in freezing conditions:
  - The line must be properly insulated.
  - The line must have a minimum slope of 30%.
  - Installers must use heat-trace wire on the condensate line to prevent freezing. Connect it to the heat trace power connection on the bottom of the unit.
  - If on a low floor, ensure that the end of the drain is above the maximum height of snow buildup.

4.2 Mounting template

INNOVA provides a mounting template to facilitate installation. To view or download the template as a high-quality PDF, click the link below:

PDF AIO Floor Standing Gen 2 Template (V 5.0).pdf

Figure 5. Mounting template

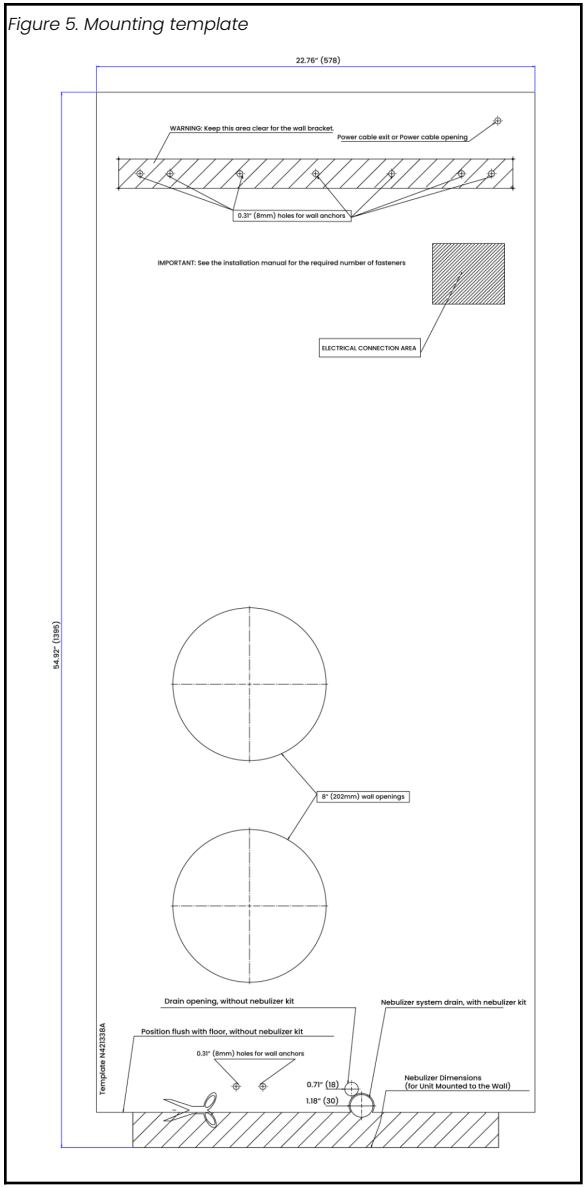

4.3 Outdoor air louver options

AIO® Floor Standing units accommodate various outdoor air louver designs, including architectural louvers and perforated panels.

Choose one of the following options:

- Use an INNOVA-approved louver, available through your INNOVA distributor:
  - **Sunvent:** LLA/C, LLA/F, LLA/S
  - **Thermaduct:** RLA8
- Use a custom louver designed with INNOVA guidance.

Always contact INNOVA before selecting, designing, or fabricating a custom louver. An unsuitable louver may restrict airflow, impair unit operation, and affect warranty coverage.

4.4 Clearance requirements

The clearances for the AIO® Floor Standing unit are required for proper airflow, maintenance, and cleaning. Minimum clearances are as follows:

- **Sides**
  A minimum of 24" (600 mm) clearance should be maintained on each side of the unit for filter access.
- **Top**
  A minimum of 5" (120 mm) clearance should be maintained at the top of the unit for proper airflow.

Figure 6. Side and Top Clearances

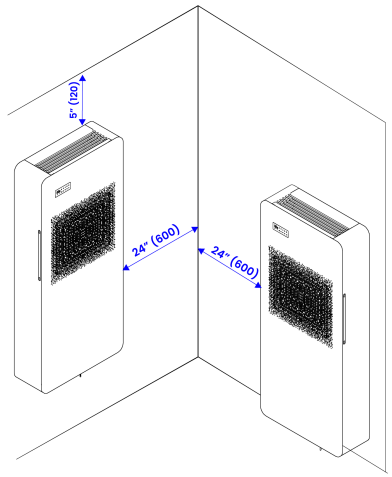

- **Bottom**
  In general, the unit should be installed flush with the floor. If a nebulizer will be used, a minimum of 8" (200 mm) clearance is required from the floor. Without this clearance, a nebulizer cannot be added later.
- **Rear**
  The rear of the unit must be tightly against the wall, with no gaps between the wall and the unit. Gaps allow outside air to enter, leading to short cycling and increased humidity. If any gaps exist, they must be sealed with insulation.
- **Exterior**
  On the exterior of the building, there should be no obstacles blocking the airflow from the louver. There must be at least 36" (914.4 mm) of free and clear space in front of the louvers.

4.5 Cold climate condensate drain requirement

For installations in cold or northern climates, a condensate drain line heater is required.

The use of a drain line heater is standard industry practice and necessary to prevent condensate freezing during low-ambient operation. Failure to install a drain line heater may result in ice formation and improper unit operation.

Ambient temperatures below 40°F (4°C) may increase the risk of freezing even when the unit is properly configured.

4.6 Low ambient heating configuration requirement - for AFE10N3H1-2/AFE10N3H2-2 only

To configure units with electric heat for resistance heating in low ambient conditions:

1. Press and hold the **Power** button for 10 seconds to enter the User Menu.
2. Press and hold the **+ and –** buttons simultaneously for 10 seconds to enter the Installer Menu.
3. Use **+ / –** to scroll to **HE**, then press **Power**.
4. Use **+ / –** to select **rT**.
5. Press **Power** again to save (the save icon appears).
6. Once returned to the main screen, press **A**, then press **A** again.

This configuration shifts the unit to electric resistance heating under low ambient conditions and avoids excessive heat pump operation, which could otherwise contribute to ice formation.

5. ADDITIONAL CONNECTIONS

AIO® Floor Standing offers an accessory port that hosts a group of connections to various accessories and components. This port is located behind the decorative panel at the bottom-right corner on the back of the unit (as viewed when facing the mounted unit), enabling a quick and easy connection for accessories and components. The connections include the following:

- **Heat Trace Power**
  When installing a condensate line that is draining directly outside, in cold climates, the required heat trace line is connected to the two-hole connector in this port.
- **Quick-connect Line Power**
  The optional quick-connect LCDI or whip power cords connect to the large black connector in this port.

6. TECHNICAL SPECIFICATIONS

6.1 Cooling

Table 1. Cooling

Heat Pump		**95°F** (1)	**105°F** (2)	**115°F** (3)
Maximum*	BTU/hr	10,000	8,450	6,730
Nominal		9,420	8,240	6,730
Minimum		3,000	2,710	2,500
Input Power	W	977	1,125	1,084
Efficiency	EER2	9.69	7.3	6.2
	SEER2	13.79	-	-
Moisture Removal	Pts/h	1.7	2.1	2.3

Notes

(1) ID: 80°F(26.7°C), W.B. 67°F(19.4°C) | OD: 95°F(35°C), W.B. 75°F(23.9°C)

(2) ID: 80°F(26.7°C), W.B. 67°F(19.4°C) | OD: 105°F(40.6°C), W.B. 75°F(23.9°C)

(3) ID: 80°F(26.7°C), W.B. 67°F(19.4°C) | OD: 115°F(46.1°C), W.B. 75°F(23.9°C)

6.2 Heating (Heat Pump Only)

Table 2. Heating

Heat Pump		**47°F** (1)	**17°F** (2)	**5°F** (3)	**0°F** (4)	**-5°F** (5)
Maximum*	BTU/hr	11,570	7,250	4,950	4,100	3,150
Nominal		9,250	6,600	4,950	4,100	3,150
Minimum		2,550	2,100	1,400	1,100	800
Input	W	819	860	520	770	490
Efficiency	COP	3.3	2.3	2.8	1.6	1.9
	HSPF2	7.20	-	-	-	-

Notes

(1) ID: 70°F(21.1°C), W.B. 60°F(15.6°C) | OD: 47°F(8.3°C), W.B. 43°F(6.1°C)

(2) ID: 70°F(21.1°C), W.B. 60°F(15.6°C) | OD: 17°F(-8.3°C), W.B. 15°F(-9.4°C)

(3) ID: 70°F(21.1°C), W.B. 60°F(15.6°C) | OD: 5°F(-15°C), W.B. 3°F(-16.1°C)

(4) ID: 70°F(21.1°C), W.B. 60°F(15.6°C) | OD: 0°F(-17.8°C)

(5) ID: 70°F(21.1°C), W.B. 60°F(15.6°C) | OD: -5°F(-20.6°C)

Optional heat strip is available for an additional 3,000 BTU/hr of heating capacity.

6.3 Airflow

Table 3. Airflow

Supply air volume		
Indoor	Type	ECM Centrifugal
	CFM	153 - 294
	m^3/hr	260 - 500
	Supply connection	Integrated
	Return connection	Integrated
	Speeds	Low, med, high, auto
	Filter	MERV 3
Outdoor	Type	ECM Centrifugal
	CFM	188 - 412
	m^3/hr	320 - 700
	Available ESP	0.25" WC (62.3 Pa)
	Intake and exhaust connection	8" (200 mm) round

6.4 General

Table 4. General

Compressor		
Type	BLDC twin rotary inverter	
Refrigerant	Type	R32
	Quantity	20.11 oz.
Oil Type	Fv50s (ISO 50) Polyvinylether (PVE)	
Controls		
Basic functionality	Dependent on the controller	
WiFi	Optional module available	
Dry contact	Yes	
Modes		

Operation	Cool, heat, dehumidify, auto, fan only
Restricted modes	Heat only, cool only, temperature limiting
Timers	Dependent on the controller
Condensate	
Pipe size	3/4" (19 mm) Outside diameter
Pipe material	Rubber

6.5 Sound

Table 5. Sound

Sound		
Indoor	dB(A)	29-49
	STC	37
	OITC	28
Outdoor	dB(A)	28-52

6.6 Dimensions

Table 6. Dimensions

Physical data			
Dimensions	Unit	in	22.7 W x 53.2 H x 8 D
		mm	578 W x 1,352 H x 204 D
	Wall hole diameter	in	7.87
		mm	200
	Wall holes distance	in	11.5
		mm	293
Weight	Net	lb	139
		kg	63
	Gross	lb	143
		kg	65
Cabinet	Finish		RAL 9003 signal white
	Material		Steel

6.7 Electrical

Table 7. Electrical - General

General		**115V**	**230V**
Volt range		103 - 127	180-253
Hz/phase		60 Hz/single phase	
Power supply		LDCI power cord or hardwire	
Power factor		0.96	
Input power (standby)	W	10.8	
Input power (off mode)		1.5	
Cooling (nominal)	A	8.8	4.4
Cooling (max)		9.4	4.7
Heat Pump Only			
Heating - heat pump only (nom.)	A	7.4	3.7
Heating - heat pump only (max)		9.4	4.7
Heat Pump + Elec Heat			
Heating - heat pump +900 W Elec Heat (nom.)	A	15.2	7.6
Heating - heat pump +900 W Elec Heat (max)		17.2	8.6

In accordance with UL 60335-2-40, motor compressor ratings for Rated Load Amps (RLA) and Locked Rotor Amps (LRA) are determined in accordance with Annex 101.DVB. For motor-compressors controlled by an adjustable speed drive, replace RLA and LRA with the rated input current of the power conversion equipment.

Table 8. Electrical - Motors

Motors			115V	230V
Compressor	RLA	A	7.9	3.9
	LRA		7.9	3.9
Indoor ECM fan motor	Watts (max)	W	110	
	FLA	A	0.8	0.4
	Power	HP	0.12	
Outdoor ECM fan motor	Watts (max)	W	110	
	FLA	A	0.8	0.4
	Power	HP	0.12	

Table 9. Electrical - LCDI Power cords

LCDI Power Cord		115V	230V
Heat Pump Only	Amps	20	15
	Plug Type	5-20P	6-15P
Heat Pump + 900 W Elec Heat	Amps	-	15
	Plug Type	-	6-15P

Table 10. Electrical -Circuit Breakers

Circuit breakers			115V	230V
Heat Pump Only	MCA	A	12	6
	MOCP		25	15
Heat Pump + 900 W Elec Heat	MCA	A	22	14
	MOCP		30	15

7. WIRING DIAGRAM

7.1 Heat pump only

To view the diagram as a high-resolution PDF, click the link below:

AIO Floor Standing Gen 2 Heat Pump Only Wiring ...

Figure 7. Floor Standing wiring diagram

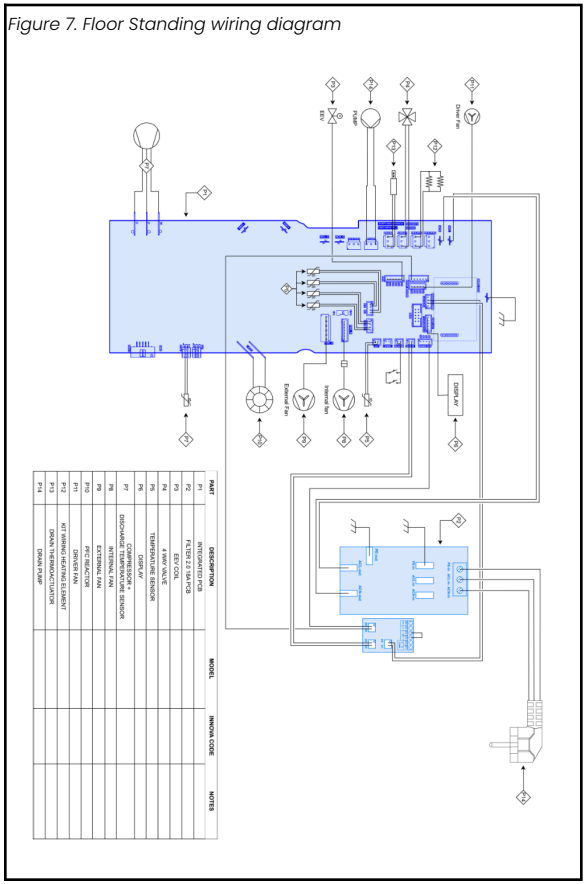

7.2 Heat pump + electric heat

To view the diagram as a high-resolution PDF, click the link below:

AIO Floor Standing Gen 2 with Electric Heat Wirin...

Figure 8. Floor Standing with electric heat wiring diagram

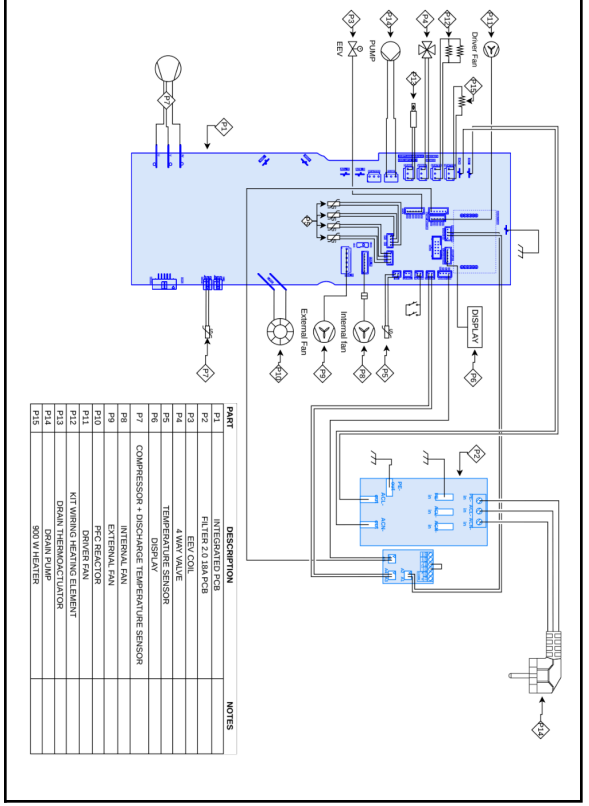

8. DIMENSIONS

To view the dimensions of the AIO® Floor Standing unit as a high-resolution PDF, click the link below:

AIO Floor Standing Gen 2 Dimensions.pdf

Figure 9. Unit Dimensions (Front View)

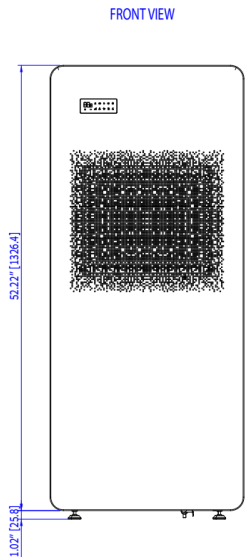

Figure 10. Unit Dimensions (Top View)

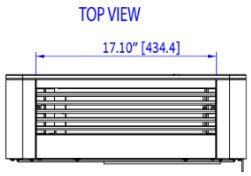

Figure 11. Unit Dimensions (Side View)

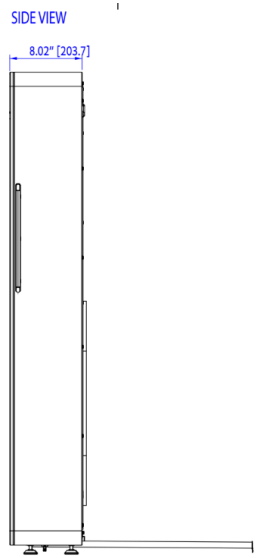

Figure 12. Unit Dimensions (Rear View)

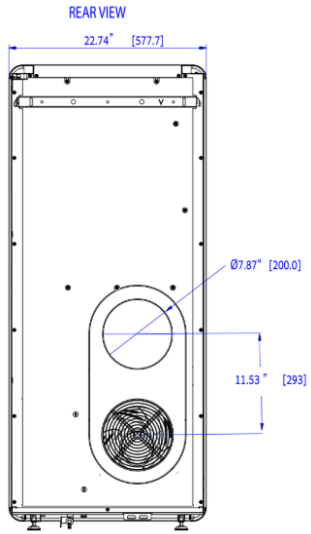

9. WARRANTY INFORMATION

9.1 Basic coverage

- **Parts:** 5 years from delivery.
- **Compressor:** 10 years from delivery.
- **Labor:** 2 years from certification (only if at least 10 units are installed, the site is certified by INNOVA or self-certified, and spare stock equal to 3% of total units is maintained)
- **Controllers:** Covered under a 2-year warranty.

9.2 Optional extended coverage

- **Additional 2-Year Parts & Labor Warranty:** Extends the basic coverage to 4 years of labor and 7 years of parts.
- **Extended 10-Year Parts Warranty:** Extends parts coverage to 10 years total.
- **Extended 5-Year Full Warranty:** Extends full parts and labor coverage to 5 years total.
- **Extended 10-Year Full Warranty:** Provides a 10-year full warranty on parts, labor, and the compressor.
- **Extended 15-Year Full Warranty:** Provides a 15-year full warranty on parts, labor, and the compressor.

9.3 Validation requirements

- Installation must be certified by an INNOVA technician or self-certified within 30 days.
- Installers must complete INNOVA training.
- The system must comply with local codes, use approved louvers, and be properly maintained (e.g., clean filters monthly, coils every 18 months).

For warranty service or claims, contact INNOVA Support at vip@innova.co or (212) 204-2700.

For detailed terms and conditions, click the link below:

AIO Warranty Terms and Conditions - 2026 - INN...

10. SUBMITTALS

10.1 115V Heat pump only

AIO® FLOOR STANDING -115V - NO ELECTRIC HEAT STRIP - R32 - SUBMITTAL (AFP10N3H1-2)

Job	Reference	Construction
Location	Approval	Quote Number
Engineer	Date	Drawing Number
Submitted To	Submitted By	P.O. Number

General Features

- BLDC inverter compressor
- ECM fans
- R32 Refrigerant
- Auto restart
- Intelligent defrost
- No outdoor unit
- Condensate disbursement systems
- Onboard touch controller
- Washable filters
- Compact slim design
- 3 selectable fan speeds + Auto
- 10-Year limited warranty (after certification)
- Made in Italy

The installing contractor must contact INNOVA Customer Technical Support prior to installation to schedule an installation training overview.

This may be conducted in person or remotely (online). It is the official installation training and may include videos, best practices, and system requirements.

Installing without training may cause installation errors, performance issues, and possible warranty limitations.

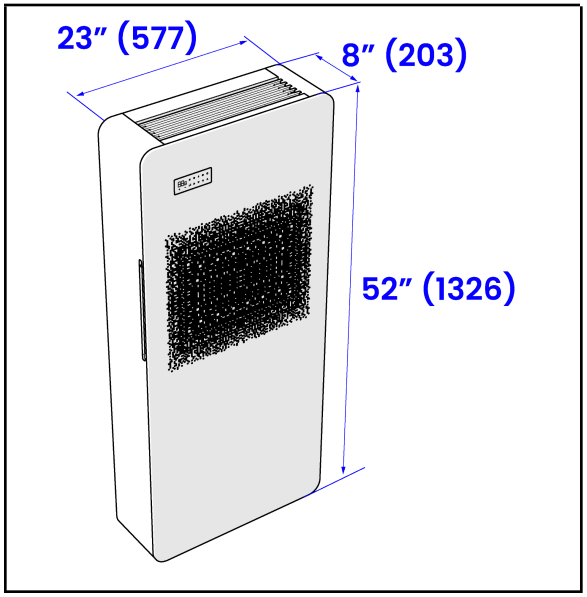

Performance Specifications			
Cooling	Min-Max	BTU/hr	2,500 - 10,000
	Rated capacity (95°F [35°C])		9,420
	Efficiency	SEER2	13.79
Heating	Min-Max	BTU/hr	800 - 11,570
	Rated capacity (47°F [8.3°C])		9,250
	Rated capacity (5°F [-15°C])		4,950
	Efficiency	HSPF2	7.20
Moisture removal		Pts/h	1.7
		L/hr	0.8
Airflow	Indoor	CFM	153 - 294
		m^3/hr	260 - 500
	Outdoor	CFM	188 - 412
		m^3/hr	320 - 700

Electric Specifications	
Power Supply (V/Ph/Hz)	115V/1Ph/60Hz
Voltage Range	103 - 127
Running Amps Cooling	8.8
Max Amps Cooling	9.8
Running Amps Heating	7.4
Max Amps Heating	9.8
MCA	12
Maximum Overcurrent Protection (A)	25

Included	Wall Controllers + Gateways	
☐	Wireless Remote	WRCH20
☐	Basic Touch Controller	LTCH20
☐	Recessed Touch Controller	RTCH20
☐	Advanced TFT Controller with 7-Day program	TFTH20
☐	Wireless (AA Battery) Infrared Controller with 7-Day program	WIPT20
☐	WiFi App Module	WIFI30
☐	E-Paper EOS Controller	EEOS12
☐	Simple EOS Controller	SEOS12
☐	Verdant wired controller	EPH4R
☐	Verdant wireless controller	EPH4W
☐	Integration gateway for LTCH20, TFTH20 and MODBUS	GWN
☐	Integration gateway for LTCH20, TFTH20, MODBUS, BACnet, and third-party thermostats	GWX

Included	Power Cord Type	Length	Amps	NEMA	SKU

☐	Long LCDI	89” (2261 mm)	20	5-20P	L129A
☐	Medium LCDI	60” (1524 mm)	20	5-20P	L126A
☐	Whip	60” (1524 mm)	Up to 40	-	W226A

10.2 115V Heat pump + elec heat

AIO® FLOOR STANDING - 115V - 900W HEAT STRIP - R32 - SUBMITTAL (AFE10N3H1-2)

Job	Reference	Construction
Location	Approval	Quote Number
Engineer	Date	Drawing Number
Submitted To	Submitted By	P.O. Number

General Features

- BLDC inverter compressor
- ECM fans
- R32 Refrigerant
- Auto restart
- Intelligent defrost
- No outdoor unit
- Condensate disbursement systems
- Onboard touch controller
- Washable filters
- Compact slim design
- 3 selectable fan speeds + Auto
- 10-Year limited warranty (after certification)
- Made in Italy

The installing contractor must contact INNOVA Customer Technical Support prior to installation to schedule an installation training overview.

This may be conducted in person or remotely (online). It is the official installation training and may include videos, best practices, and system requirements.

Installing without training may cause installation errors, performance issues, and possible warranty limitations.

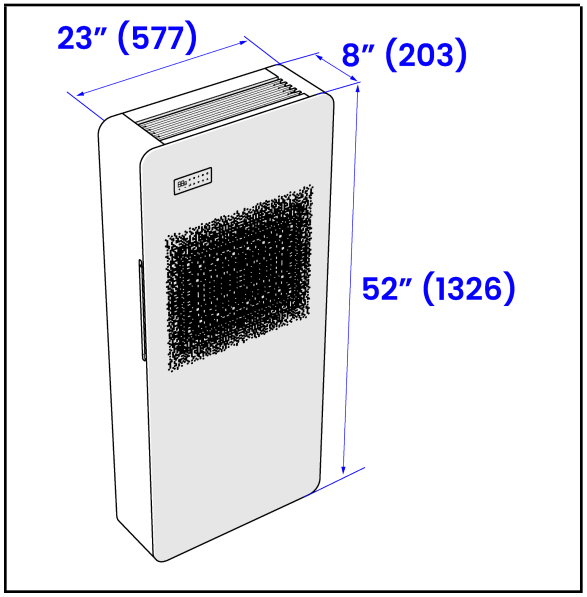

Performance Specifications			
Cooling	Min-Max	BTU/hr	2,500 - 10,0000
	Rated capacity (95°F [35°C])		9,420
	Efficiency	SEER2	13.79
Heating	Min-Max	BTU/hr	800 - 11,570
	Rated capacity (47°F [8.3°C])		9,250
	Rated capacity (5°F [-15°C])		4,950
	Efficiency	HSPF2	7.20
Moisture removal		Pts/h	1.7
		L/hr	0.8
Airflow	Indoor	CFM	153 - 294
		m^3/hr	260 - 500
	Outdoor	CFM	188 - 412
		m^3/hr	320 - 700

Electric Specifications	
Power Supply (V/Ph/Hz)	115V/1Ph/60Hz
Voltage Range	103 - 127
Running Amps Cooling	8.8
Max Amps Cooling	9.8
Running Amps Heating	15.2
Max Amps Heating	17.9
MCA	22
Maximum Overcurrent Protection (A)	30

Included	Wall Controllers + Gateways	
☐	Wireless Remote	WRCH20
☐	Basic Touch Controller	LTCH20
☐	Recessed Touch Controller	RTCH20
☐	Advanced TFT Controller with 7-Day program	TFTH20
☐	Wireless (AA Battery) Infrared Controller with 7-Day program	WIPT20
☐	WiFi App	WIFI30
☐	E-Paper EOS Controller	EEOS12
☐	Simple EOS Controller	SEOS12
☐	Verdant wired controller	EPH4R
☐	Verdant wireless controller	EPH4W
☐	Integration gateway for LTCH20, TFTH20 and MODBUS	GWN
☐	Integration gateway for LTCH20, TFTH20, MODBUS, BACnet, and third-party thermostats	GWX

Included	Power Cord Type	Length	Amps	NEMA	SKU
☐	Whip	60" (1524 mm)	Up to 40	-	W226A

10.3 230V Heat pump only

AIO® FLOOR STANDING - 230V - NO HEAT STRIP - R32 - SUBMITTAL (AFP10N3H2-2)

Job	Reference	Construction
Location	Approval	Quote Number
Engineer	Date	Drawing Number
Submitted To	Submitted By	P.O. Number

General Features

- BLDC inverter compressor
- ECM fans
- R32 Refrigerant
- Auto restart
- Intelligent defrost
- No outdoor unit
- Condensate disbursement systems
- Onboard touch controller
- Washable filters
- Compact slim design
- 3 selectable fan speeds + Auto
- 10-Year limited warranty (after certification)
- Made in Italy

The installing contractor must contact INNOVA Customer Technical Support prior to installation to schedule an installation training overview.

This may be conducted in person or remotely (online). It is the official installation training and may include videos, best practices, and system requirements.

Installing without training may cause installation errors, performance issues, and possible warranty limitations.

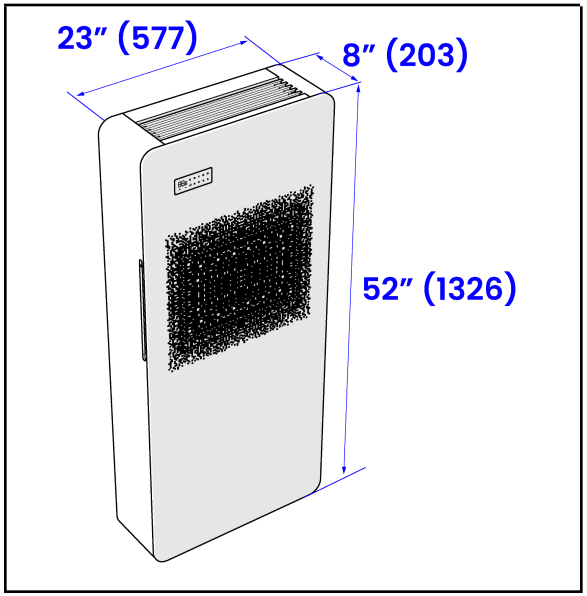

Performance Specifications			
Cooling	Min-Max	BTU/hr	2,500 - 10,000
	Rated capacity (95°F [35°C])		9,420
	Efficiency	SEER2	13.79
Heating	Min-Max	BTU/hr	800 - 11,570
	Rated capacity (47°F [8.3°C])		9,250
	Rated capacity (5°F [-15°C])		4,950
	Efficiency	HSPF2	7.20
Moisture removal		Pts/h	1.7
		L/hr	0.8
Airflow	Indoor	CFM	153 - 294
		m^3/hr	260 - 500
	Outdoor	CFM	188 - 412
		m^3/hr	320 - 700

Electric Specifications	
Power Supply (V/Ph/Hz)	230V/1Ph/60Hz
Voltage Range	180-253
Running Amps Cooling	4.4
Max Amps Cooling	4.9
Running Amps Heating	3.7
Max Amps Heating	4.9
MCA	6
Maximum Overcurrent Protection (A)	15

Included	Wall Controllers + Gateways	
☐	Wireless Remote	WRCH20
☐	Basic Touch Controller	LTCH20
☐	Recessed Touch Controller	RTCH20
☐	Advanced TFT Controller with 7-Day program	TFTH20
☐	Wireless (AA Battery) Infrared Controller with 7-Day program	WIPT20
☐	WiFi App	WIFI30
☐	E-Paper EOS Controller	EEOS12
☐	Simple EOS Controller	SEOS12
☐	Verdant wired controller	EPH4R
☐	Verdant wireless controller	EPH4W
☐	Integration gateway for LTCH20, TFTH20 and MODBUS	GWN
☐	Integration gateway for LTCH20, TFTH20, MODBUS, BACnet, and third-party thermostats	GWX

Included	Power Cord Type	Length	Amps	NEMA	SKU
☐	Long LCDI	89" (2261 mm)	15	6-15P	L251A
☐	Medium LCDI	60" (1524 mm)	15	6-15P	L256A
☐	Whip	60" (1524 mm)	Up to 40	-	W226A

10.4 230V Heat pump + elec heat

AIO® FLOOR STANDING - 230V - 900W HEAT STRIP - R32 - SUBMITTAL (AFE10N3H2-2)

Job	Reference	Construction
Location	Approval	Quote Number
Engineer	Date	Drawing Number
Submitted To	Submitted By	P.O. Number

General Features

- BLDC inverter compressor
- ECM fans
- R32 Refrigerant
- Auto restart
- Intelligent defrost
- No outdoor unit
- Condensate disbursement systems
- Onboard touch controller
- Washable filters
- Compact slim design
- 3 selectable fan speeds + Auto
- 10-Year limited warranty (after certification)
- Made in Italy

The installing contractor must contact INNOVA Customer Technical Support prior to installation to schedule an installation training overview.

This may be conducted in person or remotely (online). It is the official installation training and may include videos, best practices, and system requirements.

Installing without training may cause installation errors, performance issues, and possible warranty limitations.

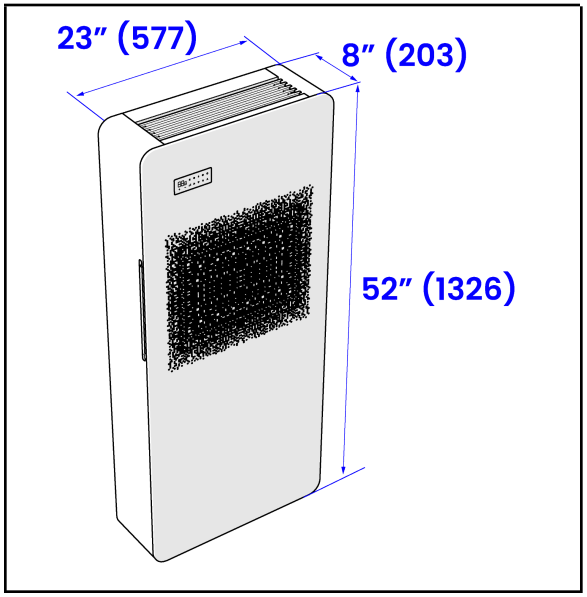

Performance Specifications			
Cooling	Min-Max	BTU/hr	2,500 - 10,000
	Rated capacity (95°F [35°C])		9,420
	Efficiency	SEER2	13.79
Heating	Min-Max	BTU/hr	800 - 11,570
	Rated capacity (47°F [8.3°C])		9,250
	Rated capacity (5°F [-15°C])		4,950
	Efficiency	HSPF2	7.20
Moisture removal		Pts/h	1.7
		L/hr	0.8
Airflow	Indoor	CFM	153 - 294
		m^3/hr	260 - 500
	Outdoor	CFM	188 - 412
		m^3/hr	320 - 700

Electric Specifications

Power Supply (V/Ph/Hz)	230V/1Ph/60Hz
Voltage Range	180-253
Running Amps Cooling	4.4
Max Amps Cooling	4.9
Running Amps Heating	7.6
Max Amps Heating	9.0
MCA	14
Maximum Overcurrent Protection (A)	15

Included	Wall Controllers + Gateways	
☐	Wireless Remote	WRCH20
☐	Basic Touch Controller	LTCH20
☐	Recessed Touch Controller	RTCH20
☐	Advanced TFT Controller with 7-Day program	TFTH20
☐	Wireless (AA Battery) Infrared Controller with 7-Day program	WIPT20
☐	WiFi App	WIFI30
☐	E-Paper EOS Controller	EEOS12
☐	Simple EOS Controller	SEOS12
☐	Verdant wired controller	EPH4R
☐	Verdant wireless controller	EPH4W
☐	Integration gateway for LTCH20, TFTH20 and MODBUS	GWN
☐	Integration gateway for LTCH20, TFTH20, MODBUS, BACnet, and third-party thermostats	GWX

Included	LCDI Cord Length		Amps	NEMA	SKU

☐	Long LCDI	89" (2261 mm)	15	6-15P	L251A
☐	Medium LCDI	60" (1524 mm)	15	6-15P	L256A
☐	Whip	60" (1524 mm)	Up to 40	-	W226A

With over 20 years of experience in the climate comfort sector, we have a clear goal: growth through innovation. Our team is laser-focused on the conception, development, and production of innovative heating, ventilation, and air conditioning solutions. This mission has developed through bringing together technical skills, creativity, technology, design, Italian passion, and a global vision to achieve the best energy efficiency and performance.

innova.co | **USA:** 216-710-1000 **Canada:** 416-739-1000

MADE IN ITALY

© 2026 INNOVA. All rights reserved.

Revised October 15, 2026