AIO® MOD-TPG Third Party Thermostat Gateway for Wall Mounted (Gen 2 & 3) Units

Installation Guide

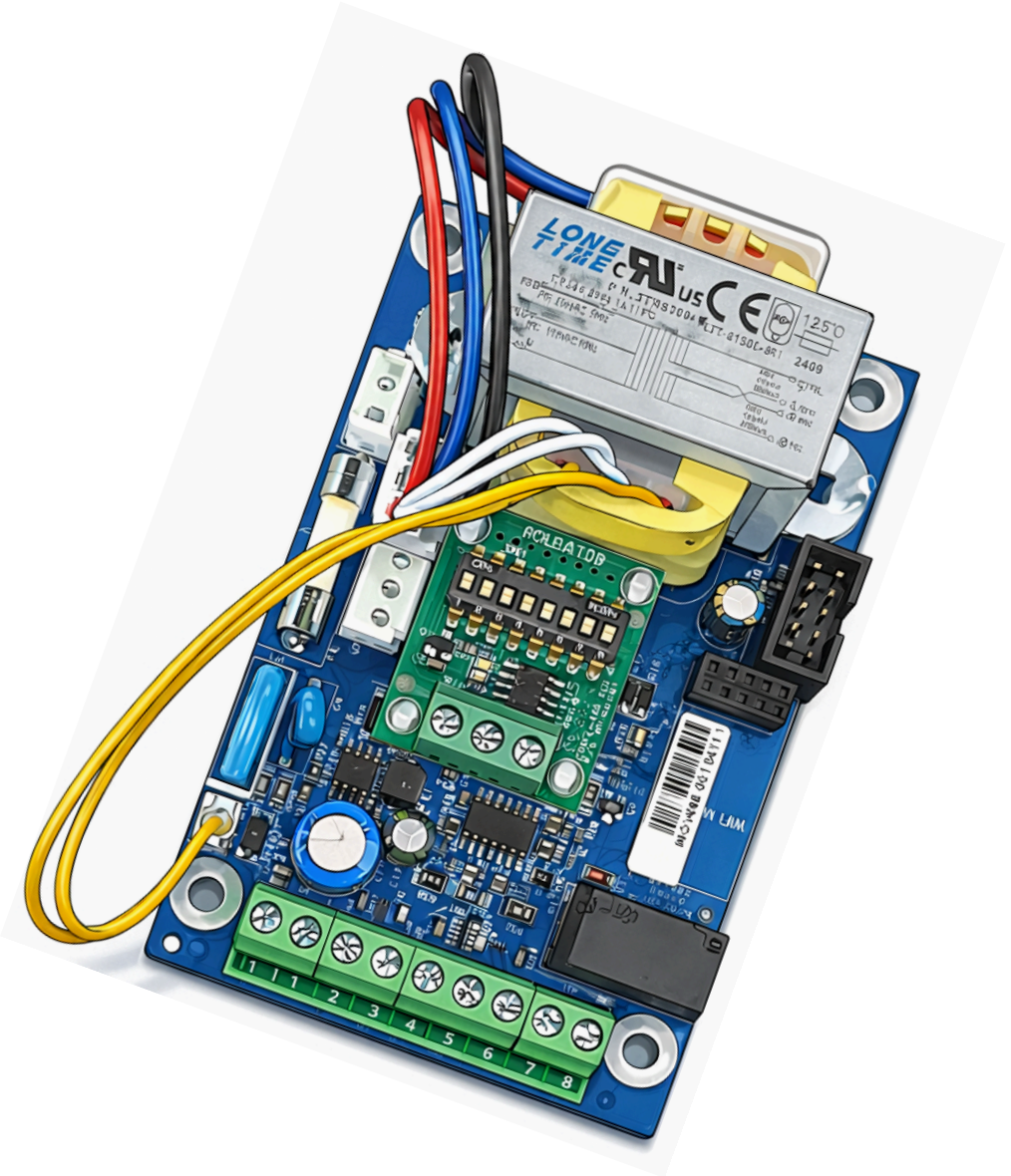

innova

CONTACT INFO

VIP Customer/Technical Support
Email: vip@innova.co
Phone: (212) 204-2700

DISCLAIMER

IMPORTANT - TRAINING IS REQUIRED PRIOR TO PERFORMING ANY INSTALLATION.

While this guide outlines the general installation requirements for the unit, it does not replace required installer training. Before commencing installation, the project manager must contact the INNOVA VIP Department at (212) 204-2700 to coordinate training for the installer.

Failure to ensure that installation is performed by INNOVA-trained personnel may result in improper operation or equipment damage, and may void the warranty.

Training may be conducted in person or remotely (online).

This documentation is intended for informational use only and should not be construed as a binding representation or contract. This documentation is provided “as is” without warranty of any kind, either express or implied. INNOVA and its affiliates disclaim all liability arising from the use or misuse of this documentation.

Illustrations may not be to scale, and all information and dimensions stated herein are subject to change at any time at the sole discretion of INNOVA. Benefits described herein apply only to the extent that the product is installed correctly in the correct application and used for its intended purpose.

INNOVA is constantly innovating and improving its products and reserves the right to modify product design and specifications without notice and without incurring any obligations.

AIO® is a registered trademark of INNOVA.

Copyright © 2026 INNOVA. All rights reserved.

CONTENTS

1. ABOUT THIS GUIDE..... 4

1.1 Specific language..... 4

1.2 Safety notices, icons, and symbols..... 4

2. THIRD PARTY THERMOSTAT GATEWAY MOD-TPG OVERVIEW..... 5

2.1 AIO® unit compatibility..... 5

2.2 MOD-TPG gateway specifications..... 5

3. SAFETY GUIDELINES - READ BEFORE INSTALLING..... 5

3.1 Fire/explosion hazards..... 5

3.2 Electrical hazards..... 6

3.3 Moving parts hazards..... 6

3.4 General safety guidelines..... 6

3.5 Installer responsibilities..... 6

4. PREPARING FOR INSTALLATION..... 7

4.1 Location considerations..... 7

4.2 Shipping configuration..... 7

4.3 Inspecting the package..... 7

4.4 Required tools and supplies..... 7

5. INSTALLING THE MOD-TPG GATEWAY IN THE AIO® WALL MOUNTED (GEN 2+) UNIT..... 8

5.1 Opening the unit..... 8

5.2 Attaching the MOD-TPG gateway to the unit..... 9

5.3 Connecting the gateway cables..... 10

5.4 Connecting the thermostat..... 11

5.5 Closing the unit..... 12

6. WARRANTY TERMS AND CONDITIONS..... 13

6.1 Exclusions and limitations..... 13

APPENDIX A: REVISION HISTORY..... 13

1. ABOUT THIS GUIDE

This guide outlines the required procedures for safely installing the MOD-TPG gateway in an AIO® heat pump unit and connecting it to a third-party thermostat. Following these instructions reduces the risk of equipment damage, improper installation, and potential safety hazards.

Important: Read the entire installation guide before beginning any installation tasks. Pay close attention to all safety warnings and notices.

Note: This guide is shipped with the gateway and is the property of the customer. Make sure this guide is left in the customer's possession.

1.1 Specific language

Some language and symbols in this guide have specific meanings.

Reference to the product
Any reference to "the unit" or "the AIO® unit" is meant to refer to the specific AIO® heat pump unit described in that section of the document.

Unit orientation
All directions in this guide (left, right, top, and bottom) are given from the perspective of facing the unit.

Role definitions
This guide is primarily intended for installers. The roles of end users and service technicians are also defined here for reference.

- **User:** A non-expert who can safely operate the unit and perform basic diagnostics and maintenance.
- **Installer:** An INNOVA-trained and certified HVAC installation technician responsible for the correct installation of the unit as indicated in the installation guide and in accordance with all local and national codes.
- **Service technician:** A trained and qualified HVAC professional who performs service or maintenance in compliance with OSHA safety requirements, recognized industry best practices, and all applicable federal, state, and local codes and standards.
- **Trained HVAC technicians:** A group term for both installation and service technicians.

1.2 Safety notices, icons, and symbols

Warnings, Cautions, and Annotations are included throughout this guide. Read each carefully and follow the stated instructions.

Safety notices
Each safety notice represents the level and immediacy of risk. Each warning panel displays a background color and a signal word and includes an icon to specify the topic.

DANGER

A red notice with the **DANGER** title indicates an imminently hazardous situation that could result in death or serious injury if not avoided.

WARNING

The orange notice with the **WARNING** title indicates a potential hazard that, if not avoided, could result in death or serious injury.

CAUTION

The yellow notice with the **CAUTION** title indicates a hazardous situation that, if not avoided, could result in minor to moderate injury or property damage.

Warning icons
The warning icons indicate the type of risk and are used in conjunction with the safety notice panels.

	The flame icon indicates information related to a hot surface or explosion hazard.
	The lightning-bolt icon indicates a warning related to electrical hazards.
	The hand icon indicates information related to a hazard involving moving parts and sharp surfaces.
	The exclamation-mark icon indicates general hazards (environmental, lifting, and other categories).

Annotation icons
Annotations are provided throughout this guide. It is important to read each one carefully and follow the stated instructions


Indicates instructions or information that is important to note to ensure optimal installation or operation of the unit.


Indicates supplemental information, tips, or useful background information.

2. THIRD PARTY THERMOSTAT GATEWAY MOD-TPG OVERVIEW

The third-party thermostat gateway MOD-TPG enables the user to control AIO® Heat Pump units with any standard or smart thermostat. The AIO®'s Brushless DC electric motor (BLDC) inverter compressor cannot be controlled by a regular or smart thermostat, which simply sends an on-off signal. The TPG sends signals from the connected standard or smart thermostat to AIO®'s processor, which then controls the inverter compressor.

Figure 1 shows the layout of the MOD-TPG gateway board, including the following connections:

- Power line connection to an AIO® unit
- Voltage selection connectors
- Communication wire connections to an AIO® unit
- Communication terminals to connect to a third-party thermostat
- Wi-Fi socket for connecting a Wi-Fi module

Figure 1. MOD-TPG gateway board layout

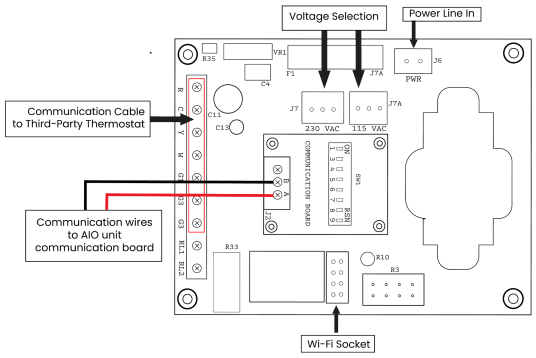

2.1 AIO® unit compatibility

The MOD-TPG gateway can be installed in AIO® Wall Mounted Standard/Pro (Gen 2+) units.

- All references to the AIO® Wall Mounted unit refer to both the Wall Mounted Standard and the Wall Mounted Pro units.
- The MOD-TPG gateway is not used with Wall Mounted Gen 1 units or other AIO® models. For these units, install the TPG-015 third-party thermostat gateway. Refer to the AIO® Third-Party Thermostat Gateway (TPG015) Installation Guide for more information.

2.2 MOD-TPG gateway specifications

The following are the specifications of the MOD-TPG gateway:

- Relay Rating: Dry Contact - 1 amp.
- Third-party thermostat inputs via seven-screw terminals.
- Operating temperature: 40°F (4.4°C) - 158°F (70°C).
- Storage temperature: 0°F (-17.8°C) - 158°F (70°C), 90% relative humidity, non-condensing.
- Power supply: Operates on either 115 V or 230 V AC, 50/60 Hz, selected via a connector on the gateway board.
- Power consumption: 4.8 watts.
- Fuse: 0.315 amp ceramic fuse.
- Dimensions: 3.54" x 2.65" x 1.5" (89.9 mm x 67.3 mm x 38.1 mm)
- Weight: 0.5 lb (0.2 kg)

The MOD-TPG Third-Party Thermostat Gateway is an optional component for the AIO® unit. It must only be used for this purpose.

3. SAFETY GUIDELINES - READ BEFORE INSTALLING

This guide details the steps required for the safe installation of a MOD-TPG gateway in an AIO® heat pump unit and connecting it to a third-party thermostat. By following these instructions, the risk of equipment damage and personal injury can be significantly reduced.

Read the entire installation guide before installing the gateway. Pay careful attention to all safety notices and warnings.

Failure to apply the indicated rules may cause malfunctions in the appliances and relieve the manufacturer of any warranty and of any liability for damage to persons, animals, or property.

All safety regulations in force at the installation site, as well as common-sense precautions, must be followed.

The precautions listed in this installation guide are intended to supplement accepted safe practices. In case of a direct conflict between accepted safety practices and this guide, the more stringent precaution takes precedence.

Failure to follow the instructions in this guide can result in property damage, serious injury, or death.

3.1 Fire/explosion hazards

⚠ WARNING

- In the event of abnormal conditions (such as a strange or burning smell, noise, or smoke), turn off the unit and disconnect it from its power source immediately. Report the issue immediately to your INNOVA representative or distributor.
- Servicing shall be performed only as recommended by the manufacturer.

3.2 Electrical hazards

⚠ DANGER

- Only trained HVAC technicians may install this gateway. Improper modifications by an unqualified person can result in serious injury or death.
- When working on the equipment, observe all precautions in the guide and on labels attached to the equipment.
- Before installation, maintenance, or servicing, disconnect power to the entire system. Verify that power to the entire system is down, including any remote disconnects, peripherals, third-party devices, and devices operating on the unit's network.
- Follow all OSHA-compliant Lockout/Tagout (LOTO) procedures.

⚠ WARNING

- All electrical connections, wiring, and grounding must be done by a qualified electrician and must comply with the National Electrical Code (NEC/NFPA-70) and all local codes that hold jurisdiction. Improper wiring or loose connections may cause overheating, fire, or electric shock.
- Use only the supplied installation-specific components. Using different components could lead to water leakage, electric shock, or fire.
- Do not open access panels to the interior of the unit without first disconnecting the power and/or turning off the breaker.
- The unit contains capacitors that may retain an electrical charge after the power is disconnected. Thus, before beginning any installation or servicing, to avoid electrical shock or serious injury, be sure to:
  - Discharge all motor start-run capacitors.

⚠ WARNING

  - Verify (using a voltmeter) that no power is running into the unit.
  - Wait at least five minutes for the AIO® unit to cool down and for the capacitors inside the unit to discharge.

⚠ CAUTION

- In the event of a blackout or thunderstorm, turn the unit off and disconnect it from the power source immediately.

3.3 Moving parts hazards

⚠ DANGER

- Do not operate the equipment with panels, guards, or covers removed, except when specifically instructed by the procedures below to test the installation.
- Ensure power is disconnected and components have come to a complete stop before accessing the interior. Internal fans, motors, and other moving components may start automatically when power is supplied.

⚠ WARNING

- Keep hands, hair, tools, and loose clothing away from fans and moving components. Contact with moving parts can cause serious injury.
- Do not remove, bypass, or disable protective covers, guards, or safety interlocks.

3.4 General safety guidelines

⚠ WARNING

- Do not modify or tamper with the gateway or controller. Unauthorized alterations may compromise safety, create hazardous conditions, and void the warranty.
- Wear appropriate personal protective equipment (PPE) such as gloves and safety glasses during the installation process.
- Only a qualified HVAC professional may install this unit. The installer must be licensed, insured, or bonded, as required by local regulations.



Installation by anyone other than an INNOVA-trained and qualified HVAC professional voids the warranty on the unit.

3.5 Installer responsibilities

- Install the unit safely and in accordance with all applicable local and national codes and regulations.
- Ensure that you fully understand the product and the installation procedures before beginning installation. Installation activities involve greater risk than normal system operation.
- Provide the customer with the information necessary to operate the system safely after installation.

The safety precautions in this guide are intended to supplement recognized best practices. In the event of a conflict, the more stringent safety measure always takes precedence.

4. PREPARING FOR INSTALLATION

4.1 Location considerations

The thermostat must be mounted indoors where it is not exposed to the elements, on a wall that represents the average temperature of the space.

The thermostat should NOT be mounted in any of the following locations:

- Where it may be exposed to wind, rain, or mist, such as near doors or windows that are frequently opened.
- Near any heat source or heating vent.
- In direct sunlight.
- In areas prone to being dusty or dirty.
- Where it is not easily accessible.
- In areas where the temperature may be outside the range of 15°F (-9.4°C) - 120°F (48.9°C).
- In areas where the humidity can exceed 95%.
- Near machinery that produces electromagnetic interference (EMI).



The presence of EMI can disrupt the normal operation of the thermostat.

4.2 Shipping configuration

The MOD-TPG Third Party Thermostat Gateway is shipped in a single package containing the MOD-TPG gateway board with a black power cable pre-connected to the board, and a smaller black communication cable pre-connected to the auxiliary board that is mounted on the gateway with spacers. The gateway also has two double-sided adhesive foam strips pre-attached to the back of the board.

4.3 Inspecting the package

When the shipment is received, inspect it thoroughly before proceeding to installation:

1. Ensure that the contents match the order and shipping documents.
2. Inspect the entire gateway board and any accessories for any damage that may have occurred during shipping.
3. If the package or contents appear damaged:
   a. Photograph all damage and all sides of the component to support a damage claim.
   b. Clearly document the damage on the freight bill.
   c. Notify your INNOVA representative or distributor.



Report all damage within two weeks of delivery to be eligible for a claim.

4.4 Required tools and supplies

- #2 Phillips-head screwdriver
- Mini (⅛") flathead screwdriver
- Thermostat from a third-party manufacturer
- Alcohol pad
- Thermostat from a third-party manufacturer.
- Multi-conductor (5 or 7, see below) control cable with solid copper conductors, of sufficient length to run between the unit and the thermostat:
  - For cable lengths of less than 30 feet (9 m), an unshielded twisted-pair cable may be used in low-noise environments.
  - For cable lengths of 30 ft (9 m) or more, an overall 18 AWG shielded twisted-pair cable is required.



Note: The total wire run may not exceed 40 feet (12.1 m).



Multi-Conductor cable:
The MOD-TPG gateway supports three fan speeds (high, medium, and low). For third-party thermostats that support all three speeds, seven wires are needed in the control cable. For thermostats that support only one fan speed, five wires are needed. Refer to section 6.

5. INSTALLING THE MOD-TPG GATEWAY IN THE AIO® WALL MOUNTED (GEN 2+) UNIT

To install the MOD-TPG gateway in an AIO® Wall Mounted (Gen 2 or 3) unit and connect it to a third-party thermostat:

1. Open the unit.
2. Attach the gateway to the unit.
3. Connect the power and communication cables between the gateway and the unit.
4. Connect the gateway to the thermostat.
5. Close the unit.

5.1 Opening the unit

To open the AIO® Wall Mounted (Gen 2 or 3) unit:

1. **Disconnect the power supply.**
   Disconnect the unit from the power supply and wait at least five minutes after it was last operated.
2. **Remove the return air filter and grille.**
   Lift the top grille off the unit, and then gently pull up on the plastic around the return air filter and carefully lift the filter out.

Figure 2. Lift off the top grille

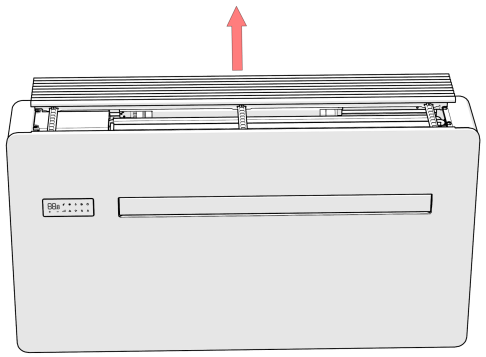

Figure 3. Remove the filter

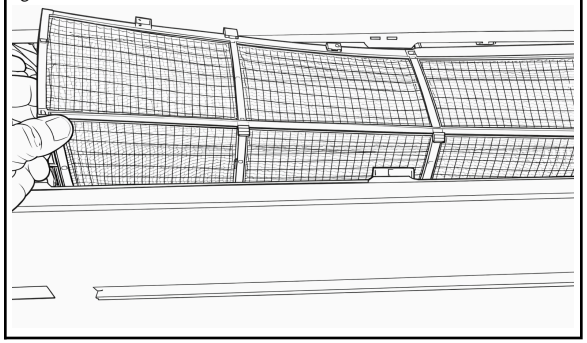

3. **Remove the front panel.**
   a. Remove the two front screws on the top of the unit.

Keep the screws that are removed in each step separate.

Figure 4. Remove the front top screws

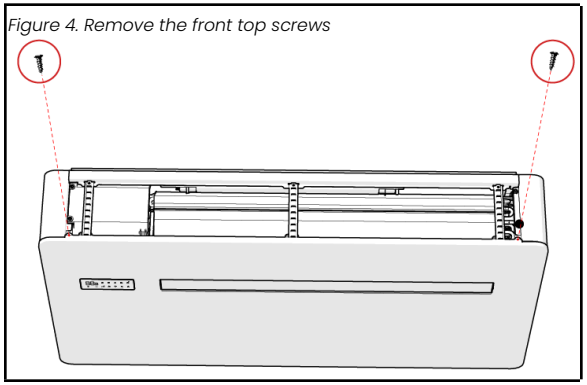

   b. Carefully pull the front cover slightly forward, and disconnect the onboard touch controller from the unit.

Figure 5. Pull the front cover forward

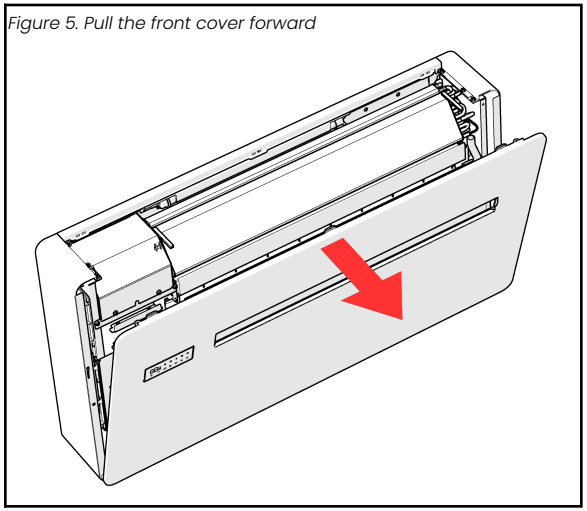

Figure 6. Unclip the onboard touch controller

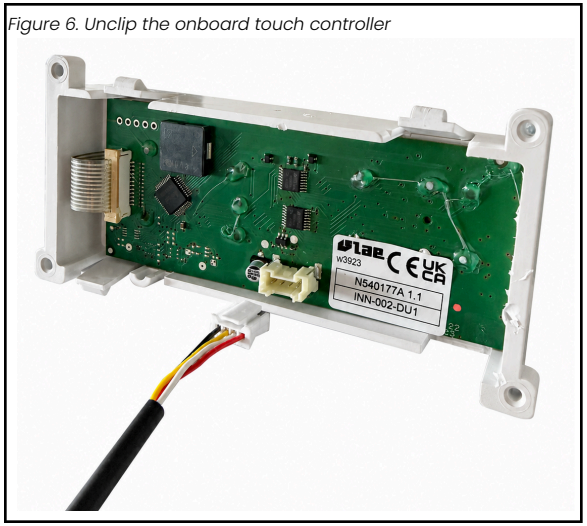

⚠CAUTION

When removing the front cover panel of the AIO® Wall Mounted (Gen 3) unit:

- The Onboard Touch Controller is clipped to the back of the front cover panel, and a wire harness connector is soldered directly on the back of the controller.
- Do not pull the panel abruptly, because this can tear the connector from the Onboard Touch Controller, causing damage.
- Carefully disconnect the wire harness connector before fully removing the front cover panel to prevent damage to the connector or the Onboard Touch Controller.

c. Carefully remove the front decorative panel.

Figure 7. Remove the front panel

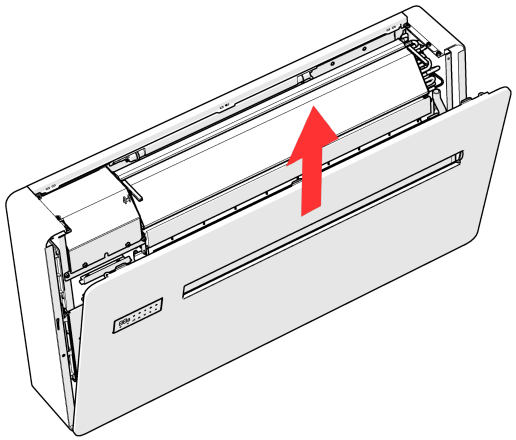

4. **Remove the electrical protective cover.**
   Remove the two screws on the top left that hold the black plastic electrical protective cover in place on the frame.

Figure 8. Remove the left screws from the electrical cover

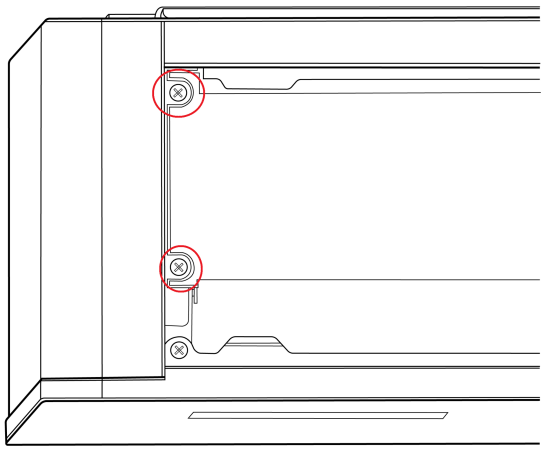

5.2 Attaching the MOD-TPG gateway to the unit

The MOD-TPG gateway comes with the power and communication cables (both black) pre-attached. In the figure below, the power cable is on the left, and the smaller communication cable is on the right.

Figure 9. MOD-TPG gateway board with cables

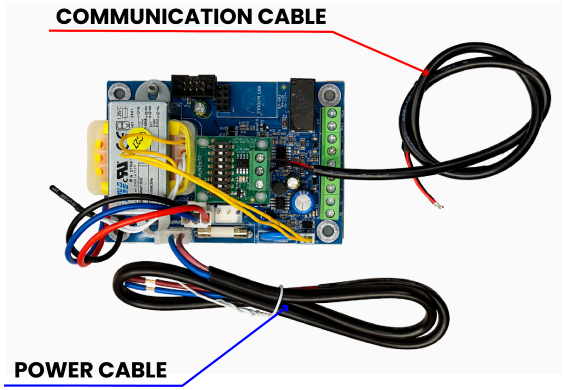

Although the AIO® Wall Mounted Gen 3 unit also has power and communication cables preattached to the unit, when installing the MOD-TPG gateway, due to the installation method, these cables are not used, and the cables attached to the gateway are used instead.

⚠CAUTION

Handle the control board and all electronic components with care to avoid damage.

To attach the MOD-TPG third-party thermostat gateway to the AIO® Wall Mounted (Gen 2 or 3) unit:

1. **Mount the MOD-TPG gateway to the unit.**
   a. Clean the mounting location on the underside of the black plastic electrical protective cover with an alcohol pad to ensure proper adhesion. The mounting location is shown below.
   b. Remove the backing from the two adhesive foam strips that are attached to the back of the gateway board.

Figure 10. Adhesive strips on the MOD-TPG gateway board

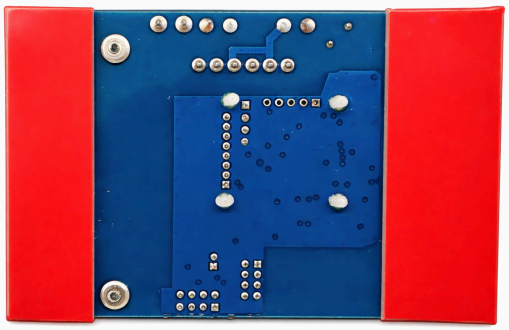

c. Mount the MOD-TPG gateway board to the underside of the black plastic electrical protective cover, placing it one inch (2.5 cm) from the right side, as shown. Press firmly to ensure the gateway is securely attached.

The foam in the adhesive strips provides insulation to prevent short-circuits.

Figure 11. Mounting the gateway board



⚠CAUTION

Make sure there is no direct contact between the gateway board and the metal panel.

2. **Set the correct voltage.**
   The MOD-TPG gateway board is set at the factory to 230V. If the AIO® Wall Mounted unit uses 115V, remove the connector from the 230V socket and place it into the 115V socket as shown below.

Figure 12 Set the gateway board voltage

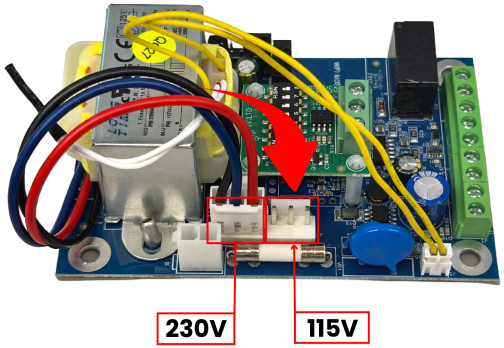

⚠CAUTION

Make sure the TPG015 gateway is set to the same voltage as the AIO unit. Connecting a 115 V gateway to a 230 V unit will destroy the gateway.

5.3 Connecting the gateway cables

To connect the power and communication cables between the MOD-TPG gateway and the AIO® Wall Mounted (Gen 2 or 3) unit:

1. **Connect the power cable to the unit.**
   a. Verify that the white plastic quick connector on the power cable is securely connected to the power port on the gateway board.

Figure 13. Power cable connection on the gateway



b. On the electrical panel of the unit, carefully unscrew the two screws securing the blue and brown wires. Slide the blue wire over the blue wire and the reddish-brown wire over the brown wire, then fasten the screws.

Figure 14. Connecting the power cable to terminals on the unit

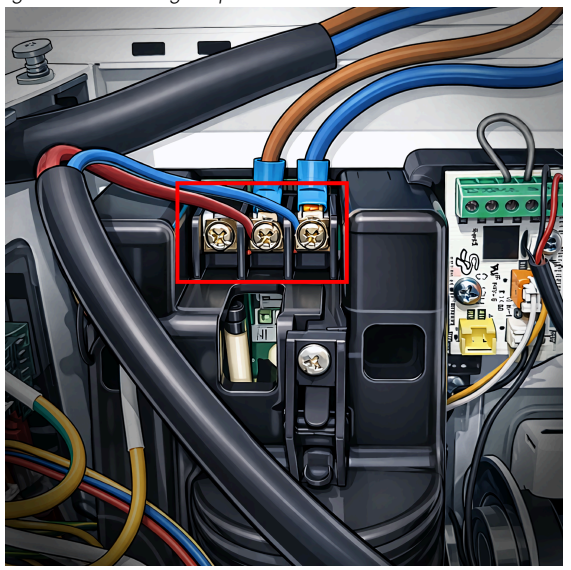

2. **Connect the communication cable.**

   a. Verify the red and black wires are connected to the right-most and middle terminals on the auxiliary board mounted on the MOD-TPG gateway, as shown.

Figure 15. Communication cable connection on the gateway

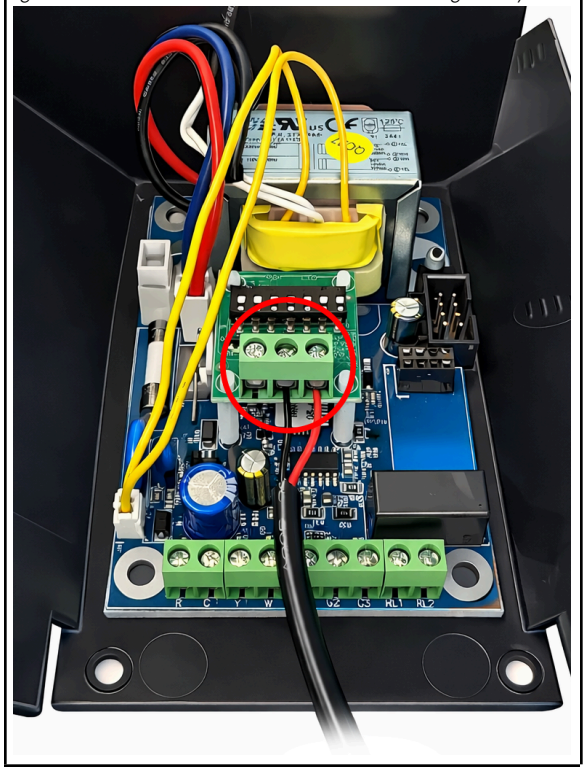

   b. Connect the red wire to the B1 terminal and the black wire to the B2 terminal on the Junction board on the unit, as shown.

Figure 16. Connecting the communication cable to the unit

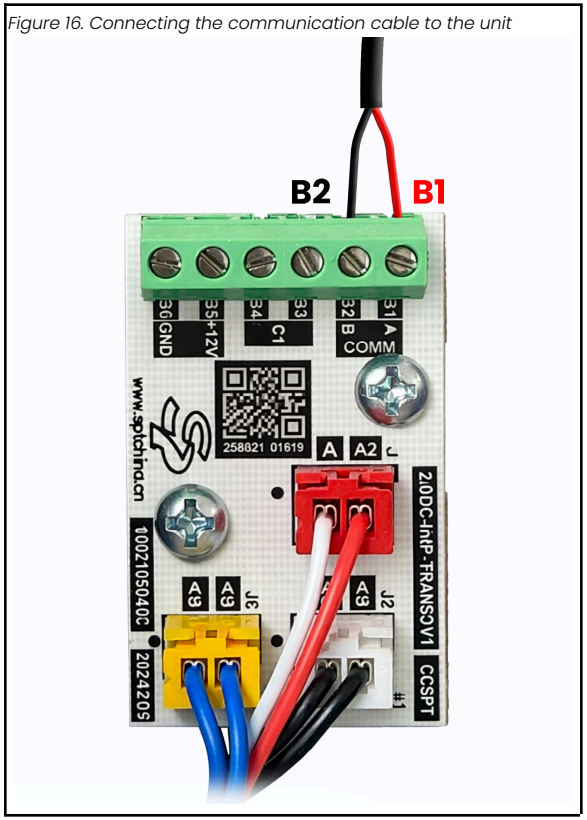

Figure 17. Communication wires connected to gateway and unit

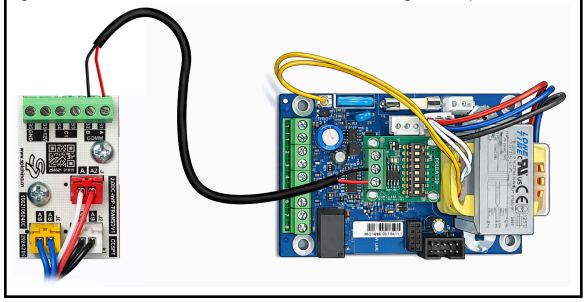

5.4 Connecting the thermostat

To connect the third-party thermostat to the MOD-TPG gateway:

1. **Connect the control cable to the gateway.** With the power remaining disconnected, connect the seven* wires of the control cable through the back of the AIO® Wall Mounted unit to the following terminals on the MOD-TPG gateway board:
   - R - Power 24 VAC
   - C - Common
   - Y - Cool
   - W - Heat
   - G1 - High Fan Speed
   - G2 - Medium Fan Speed
   - G3 - Low Fan Speed

* If using a thermostat that has only a single fan speed, use only five wires. In this case, you must choose the fan speed at which you want the AIO® unit to operate by attaching the fan wire to either G1 for high fan, G2 for medium fan, or G3 for low fan. We recommend using G2 for medium fan speed.

Figure 18. Terminals on the gateway for connecting the wires

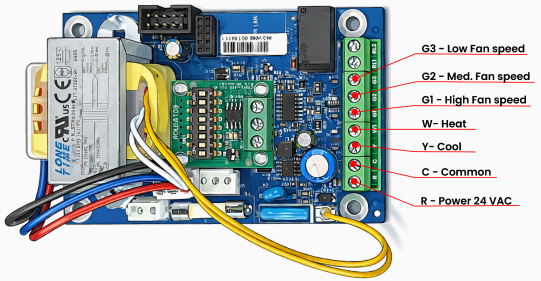

⚠CAUTION

When using a third-party thermostat with this gateway, you must use both the R and C wires, even if it is a smart thermostat. Do not use any workarounds to the C-wire that steal or bleed power from the R or the Y1 wire.

2. **Connect the control cable to the thermostat.**
   Follow the manufacturer's instructions for the thermostat you are using to connect the wires of the control cable from the MOD-TPG gateway board to the corresponding inputs on the thermostat.

   Where the inputs do not match the terminal labels exactly, refer to the following table:

If the thermostat has:	Connect this gateway wire:	To this thermostat input
RC and RH	R	Either one (RC and RH use the same transformer)
Y1 and Y2	Y	Y1
W1 and W2	W	W1
Only one G	G2	G
	G1, G3	Not used

Figure 19. Connecting the wires to the thermostat (for reference only)

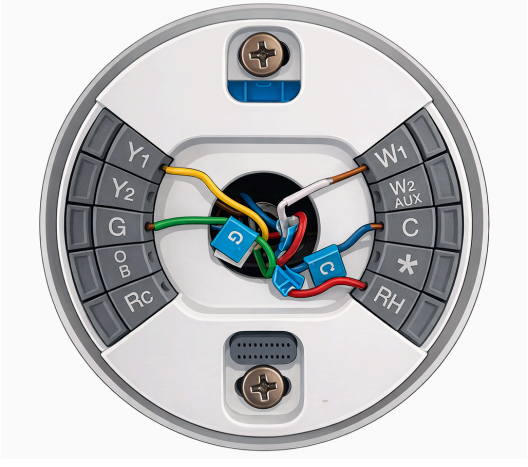

The image above illustrates a particular type of third-party thermostat for reference only. The appearance of the thermostat and the connections required may vary from the illustration.

⚠CAUTION

Ensure that all wire insulation is intact and that there are no exposed conductive parts that could cause short circuits or other electrical issues.

5.5 Closing the unit

To close the AIO® Wall Mounted (Gen 2 or 3) unit:

1. **Position the electrical cover in place.**
   Put the black electrical protective cover in place to cover the electrical connections while the unit is being tested.

Do not secure the cover with screws until after the unit has been tested.

2. **Test the onboard touch controller.**
   a. Reconnect the power supply to the unit and power it on.
   b. Test the onboard touch controller to verify that it changes the temperature setting and operating modes as selected. Refer to the AIO® Wall Mounted (Gen 2/3) User Guide for more information.
      - If the touch controller works as expected, power off the unit and wait at least five minutes for the capacitors inside the unit to discharge.
      - If the test fails, repeat the applicable steps in Sections 5.1 through 5.3 to verify that all connections are secure, and then repeat the test. If the test still fails, contact an INNOVA-trained service technician.

The thermostat is powered by the AIO® unit. Whenever power is supplied to the unit, the controller is also powered. If, after closing the unit, the controller does not appear to be energized, check the electrical supply to the unit.

3. **Close the unit.**
   a. Secure the black electrical protective cover to the unit using the two screws removed in section 5.1, Step 4.
   b. Reinstall the front panel and secure it to the unit using the two screws removed in section 5.1, Step 3.
   c. Reinstall the return air filter and the grille into the unit (see section 5.1, Step 2).
4. **Reconnect the power supply to the unit.**

6. WARRANTY TERMS AND CONDITIONS

Controllers and gateways carry a two-year warranty.

6.1 Exclusions and limitations

The above-noted warranty shall not cover:

- Any damage resulting from improper voltage supplied to the AIO® unit.
- Damage to a controller or gateway where there is a corrosive atmosphere containing any damaging chemical, such as chlorine or fluorine.
- Failure of the controller or gateway due to acts of God, natural disasters, power failures, interruptions, brownouts or power spikes, or due to incorrect or inadequate electrical service, or failure of internet services or home networks.
- Damages or personal injury caused directly or indirectly by failure or malfunction of the controller or gateway as a result of any cause, including natural disasters, accidents, misuse, improper wiring, or installation.

For additional information and any product inquiries, contact:

innova.co | **USA:** 216-710-1000 **Canada:** 416-739-1000

APPENDIX A: REVISION HISTORY

Rev	Date	Revised By	Changes
A	2026-04-20	Leah Kuber	Edit and include Gen 2&3 AIO® units.
B	2026-08-03	Leah Kuber	Minor technical corrections
C	2026-09-06	Leah Kuber	Add Caution for setting voltage.
D	2026-09-24	Leah Kuber	Clarify instructions for removing the front panel from the AIO unit and add Caution about the wires.

,

With over 20 years of experience in the climate comfort sector, we have a clear goal: growth through innovation. Our team is laser-focused on the conception, development, and production of innovative heating, ventilation, and air conditioning solutions. This mission has developed through bringing together technical skills, creativity, technology, design, Italian passion, and a global vision to achieve the best energy efficiency and performance.

innova.co | **USA:** 216-710-1000 **Canada:** 416-739-1000

MADE IN ITALY

© 2026 INNOVA. All rights reserved.

Revised September 24, 2026

AIO® MOD-TPG Third Party Thermostat Gateway for Wall Mounted (Gen 2 and 3) Units **Installation Guide**