AIO® MOD-TPG Third-Party Thermostat Gateway

Product Data Sheet

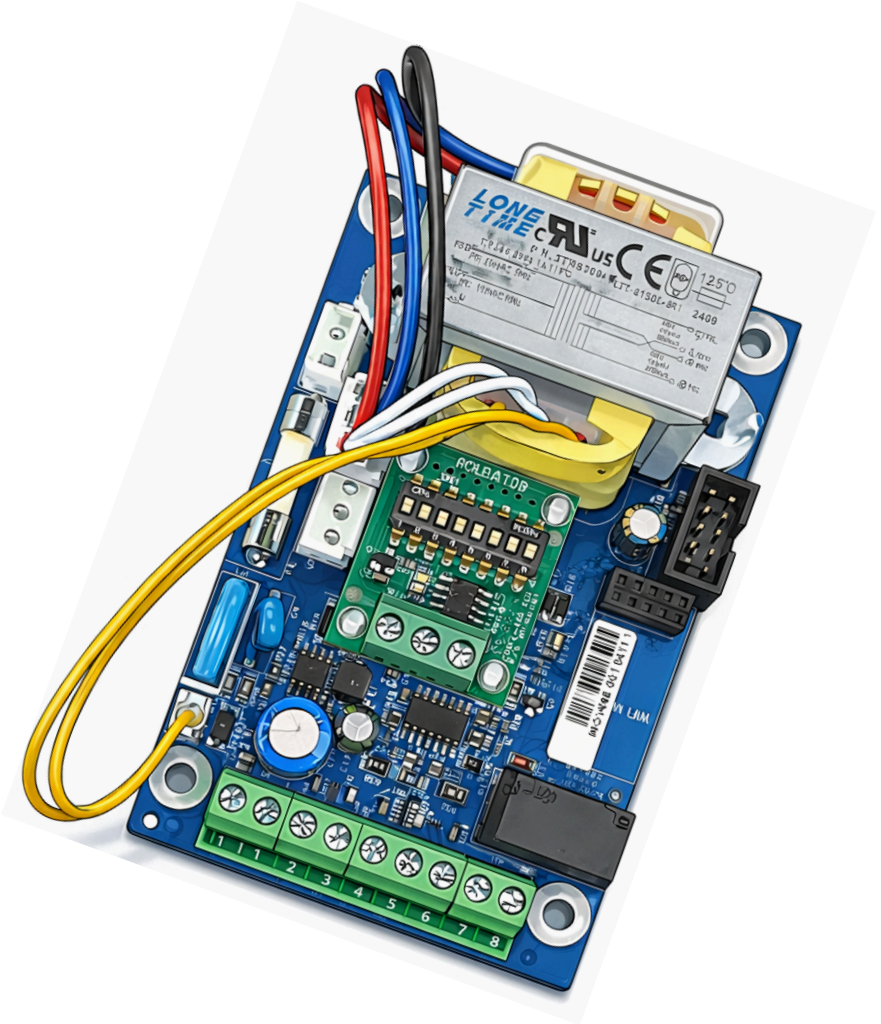

innova

CONTACT INFO

VIP Customer/Technical Support
Email: vip@innova.co
Phone: (212) 204-2700

DISCLAIMER

This documentation is intended for informational use only and should not be construed as a binding representation or contract. This documentation is provided "as is" without warranty of any kind, either express or implied. INNOVA and its affiliates disclaim all liability arising from the use or misuse of this documentation.

Illustrations may not be to scale, and all information and dimensions stated herein are subject to change at any time at the sole discretion of INNOVA. Benefits described herein apply only to the extent that the product is installed correctly in the correct application and used for its intended purpose.

INNOVA is constantly innovating and improving its products and reserves the right to modify product design and specifications without notice and without incurring any obligations.

⚠ WARNING

Only qualified professionals should install and service this equipment. Improper installation or modification by an unqualified person could result in death or serious injury. When working on the equipment, observe all precautions in the installation manual and labels attached to the equipment.

REVISION HISTORY

Rev	Date	Revised By	Changes
A	2026-04-12	Leah Kuber	New document

AIO® is a registered trademark of INNOVA.

Copyright © 2026 INNOVA. All rights reserved.

1. AIO® MOD-TPG THIRD-PARTY THERMOSTAT GATEWAY

The MOD-TPG third-party thermostat gateway enables the user to control AIO® Wall Mounted (Gen 2+) units with any standard or smart thermostat. The AIO®'s Brushless DC (BLDC) inverter compressor cannot be controlled by a standard or smart thermostat, which simply sends an on-off signal. The Third-Party Gateway (TPG) sends signals from the connected standard or smart thermostat to the AIO®'s processor, which then controls the inverter compressor.

Note: This gateway must be field-installed and connected inside the AIO® by an electrician or technician. Installation takes approximately 15 minutes.

1.1 AIO® MOD-TPG Submittal

Job	Reference
Construction	Location
Approval	Quote Number
Engineer	Date
Drawing Number	P.O. Number:
Submitted To	Submitted By:

2. FEATURES

- **Thermostats:** The MOD-TPG gateway is intended to support third-party thermostat controllers.

  Note: When the MOD-TPG gateway is connected to a third-party controller, the AIO® unit display will show "61F" ("16C") in cooling mode and "88F" ("31C") in heating mode, regardless of the actual set point. These numbers only indicate that the unit is active. The actual temperature set point is displayed on the thermostat.
- **Temperature control:** Enables controlling the temperature setpoint in one-degree increments.
- **Modes:** Supports Cooling, Heating, and Fan Only modes.
- **Fan speeds:** Supports Low, Medium, and High fan speeds.
- **Smart thermostats:** Supports smart thermostat features for timers, controls, etc.

3. SPECIFICATIONS

- **Power supply:** Operates on either 115 V or 230 V AC, 50/60 Hz, selected via a connector on the gateway board.
- **Power consumption:** 4.8 watts.
- **Operating environment:** Functional between 40°F (4.4°C) and 158°F (70°C).
- **Storage environment:** Stable between 0°F (-17.8°C) and 158°F (70°C) at 90% relative humidity (non-condensing).
- **Fuse protection:** 0.3 amp ceramic fuse.
- **Supported temperature set points:** 61°F - 88°F (16.1°C - 31.1°C)
- **Thermostat connections:**
  - R, C, Y, W, G1, G2, and G3 terminals (G1 = High Fan, G2 = Medium Fan, G3 = Low Fan)
  - 24V power terminal.
- **Dimensions:**
  - Width: 2.65" (67.3 mm)
  - Length: 3.54" (89.9 mm)
  - Height: 1.5" (38.1 mm)
  - Weight: 0.5 lb. (0.2 kg)
- **Warranty:** Two-year limited warranty

4. WIRING AND INSTALLATION

The MOD-TPG third-party thermostat gateway board has a black power cable pre-connected to the board, and a smaller black communication cable pre-connected to the auxiliary board mounted on the gateway with spacers.

Installers must connect the power cable from the MOD-TPG gateway to the electrical panel of the AIO® unit, and the communication cable from the gateway to the junction board on the unit.

For AIO® units with the power cable pre-installed in the unit, the power cable on the gateway must be disconnected, and the cable that is connected to the unit should be connected to the gateway instead.

4.1 AIO® unit compatibility

The MOD-TPG gateway can be installed in AIO® Wall Mounted Standard/Pro (Gen 2+) units.

The MOD-TPG is not compatible with AIO® Wall Mounted (Gen 1), Ceiling Ducted/Suspended, Vertical Stack, or Vertical Stack XL units.

For complete installation instructions, refer to the AIO® MOD-TPG Third-Party Thermostat Gateway Installation Guide.

5. LAYOUT

Figure 1. MOD-TPG Gateway Control Board Layout

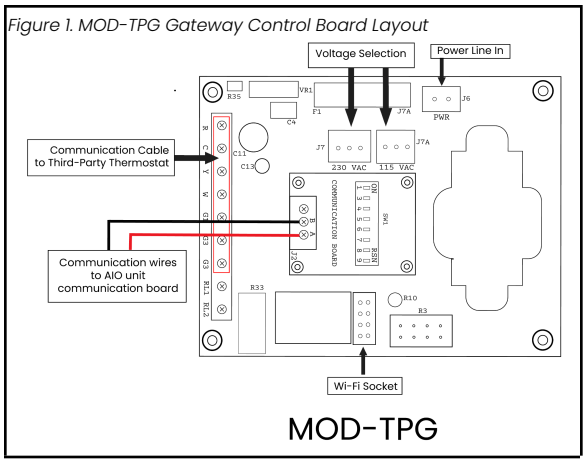

With over 20 years of experience in the climate comfort sector, we have a clear goal: growth through innovation. Our team is laser-focused on the conception, development, and production of innovative heating, ventilation, and air conditioning solutions. This mission has developed through bringing together technical skills, creativity, technology, design, Italian passion, and a global vision to achieve the best energy efficiency and performance.

innova.co | **USA:** 216-710-1000 **Canada:** 416-739-1000

MADE IN ITALY

© 2026 INNOVA. All rights reserved.

Revised August 22, 2026

AIO® MOD-TPG Third-Party Thermostat Gateway

Product Data Sheet