AIO® Vertical Stack without ERV (Gen 4)

Product Data Sheet



innova

AHRI CERTIFIED® www.ahridirectory.org
Unitary Small HP
AHRI Standard 210/240

ETL LISTED c US
Intertek

nep

Passivhaus Institut

energy ENERGY STAR

CONTACT INFO

VIP Customer/Technical Support
Email: vip@innova.co
Phone: (212) 204-2700

DISCLAIMER

This documentation is intended for informational use only and should not be construed as a binding representation or contract. This documentation is provided "as is" without warranty of any kind, either express or implied. INNOVA and its affiliates disclaim all liability arising from the use or misuse of this documentation.

Illustrations may not be to scale, and all information and dimensions stated herein are subject to change at any time at the sole discretion of INNOVA. Benefits described herein apply only to the extent that the product is installed correctly in the correct application and used for its intended purpose.

INNOVA is constantly innovating and improving its products and reserves the right to modify product design and specifications without notice, and without incurring any obligations.

MODEL NUMBER NOMENCLATURE

The code identifies the family, model, version, size, voltage, accessories, refrigerant type, and ERV option. See the diagram below for details.

Figure 1. AIO® nomenclature

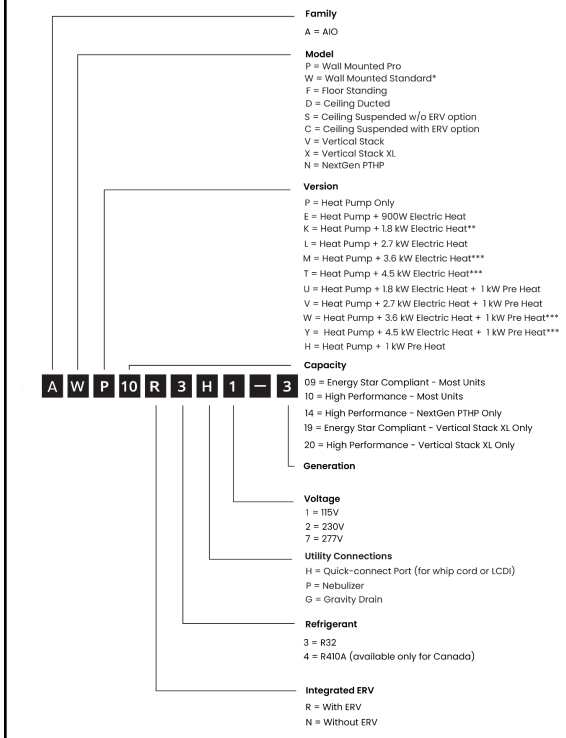

* 8" Vents : Just generation (e.g. = 3)
6" Vents : Generation + SP (e.g. = 3SP)
** Field convertible to 900W
*** AIO® Vertical Stack XL **Only**

AIO® is a registered trademark of INNOVA.
Copyright © 2026 INNOVA. All rights reserved.

CONTENTS

1. READING THIS DOCUMENTATION..... 4

1.1 Documentation-specific language..... 4

1.2 Annotation icons..... 4

2. AIO® VERTICAL STACK WITHOUT ERV OVERVIEW..... 4

2.1 Components and structure..... 4

2.2 Configurations..... 5

2.3 Key features..... 5

2.4 Optional accessory: Rough-in Box..... 6

3. AIRFLOW..... 6

3.1 Airflow operation..... 6

3.2 Airflow diagram..... 6

3.3 Fan coil part..... 7

3.4 Condenser part..... 7

3.5 Fan curves..... 7

4. INSTALLATION REQUIREMENTS..... 8

4.1 Air balancing requirements..... 8

4.2 Low ambient heating configuration requirement..... 8

4.3 Startup airflow commissioning..... 8

4.4 Ambient temperature protection..... 8

4.5 Site requirements..... 8

4.6 Louver specifications..... 9

4.7 Clearance requirements..... 10

5. TECHNICAL SPECIFICATIONS..... 11

5.1 High Performance..... 11

5.1.1 Cooling..... 11

5.1.2 Heating..... 11

5.2 Energy Star Compliant..... 11

5.2.1 Cooling..... 11

5.2.2 Heating..... 12

5.3 Airflow..... 12

5.3.1 Indoor..... 12

5.3.2 Outdoor..... 12

5.4 Sound..... 12

5.5 General..... 12

5.5.1 Controls..... 12

5.5.2 Modes..... 12

5.5.3 Condensate..... 12

5.5.4 Physical..... 13

5.5.5 General..... 13

5.5.6 Insulation..... 13

5.6 Electrical..... 13

5.6.1 General..... 13

5.6.2 Motors..... 13

5.6.3 LCDI power cords..... 14

5.6.4 Heater Output (W) and Heater Current (A) vs. Supply Voltage..... 14

6. LOGIC..... 14

6.1 Backup electric heat..... 14

6.2 Post-heater..... 14

6.2.1 Post-heater modes..... 14

6.3 Dehumidification..... 15

7. WIRING DIAGRAM..... 15

8. DIMENSIONS..... 15

9. WARRANTY..... 17

9.1 Basic coverage..... 17

9.2 Optional extended coverage..... 17

9.3 Validation requirements..... 17

10. SUBMITTALS..... 18

10.1 115V Heat pump only - High Performance..... 18

10.2 115V Heat pump + elec heat - High Performance..... 19

10.3 230V Heat pump only - High Performance..... 20

10.4 230V Heat pump + 1,800W elec heat - High Performance..... 21

10.5 230V Heat pump + 2,700W elec heat - High Performance..... 22

10.6 115V Heat pump only - Energy Star Compliant..... 23

10.7 115V Heat pump + elec heat - Energy Star Compliant..... 24

10.8 230V Heat pump only - Energy Star Compliant..... 25

10.9 230V Heat pump + 1,800W elec heat - Energy Star Compliant..... 26

10.10 230V Heat pump + 2,700W elec heat - Energy Star Compliant..... 27

1. READING THIS DOCUMENTATION

Some language and symbols in this documentation have specific meanings.

1.1 Documentation-specific language

Reference to the product
Any reference to "the unit" refers to the AIO® Vertical Stack without ERV (Gen 4) unit.

Unit orientation
All directions in this guide (left, right, top, bottom) are given from the perspective of facing the unit.

1.2 Annotation icons

Annotations are provided throughout this guide. It is essential to read each carefully and follow the instructions stated.

Indicates critical information for correct operation or installation.

Indicates supplemental information, tips, or useful background information.

2. AIO® VERTICAL STACK WITHOUT ERV OVERVIEW

AIO® Vertical Stack is the ideal multi-room solution when a ceiling-mounted unit is not desired or feasible. The compact 12.6-inch (320 mm) by 30-inch (761 mm) footprint uses minimal floor space. This unit is perfect anywhere direct venting or ducting is required. Use any grille and louvers for maximum design flexibility.

2.1 Components and structure

Figure 2. AIO® Vertical Stack without ERV (Gen 4) components and structure

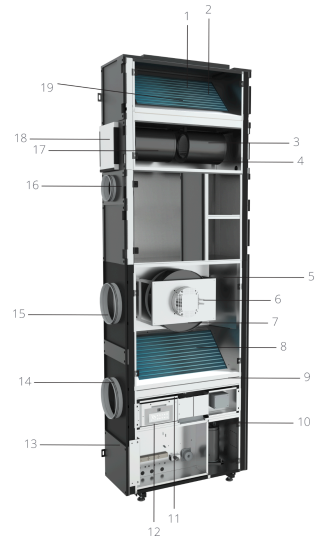

1	Top supply air vent	**11**	Electrical controls
2	Front supply air vent	**12**	Touch Controller
3	ECM supply fan	**13**	Condensate drain
4	Return vent	**14**	Condenser
5	Condenser + fresh air intake	**15**	Condenser + fresh air intake
6	ECM condenser fan	**16**	Side Exhaust (can be field swapped to the right side)
7	Condensate Mister System	**17**	ECM supply fan
8	High efficiency outdoor heat exchanger	**18**	Return vent
9	Condenser + stale air exhaust	**19**	High-efficiency indoor heat exchanger
10	Twin rotary inverter compressor		

2.2 Configurations

The AIO® Vertical Stack Gen 4 unit comes in three condensate drainpipe configurations:

Standard configuration
The drainpipe exits from the floor of the unit.

Figure 3. Standard drainpipe configuration

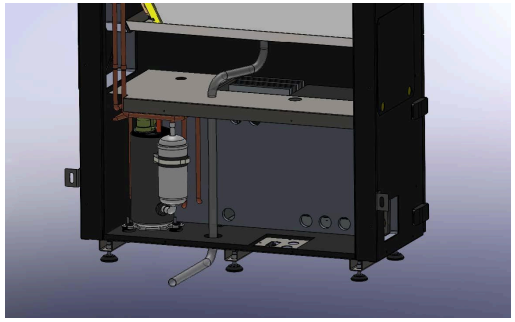

Side configuration
The drainpipe exits from one of the unit's side panels.

It is recommended to route the drainpipe on the side where ducting is not required.

Figure 4. Side drainpipe configuration

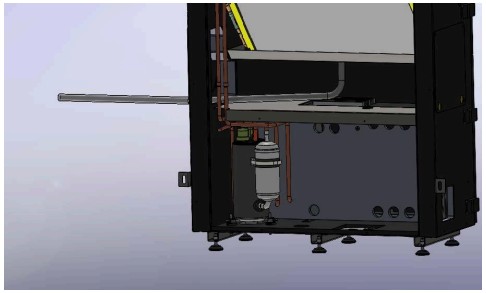

Rear configuration
The drainpipe exits from the rear panel of the unit.

Figure 5. Rear drainpipe configuration

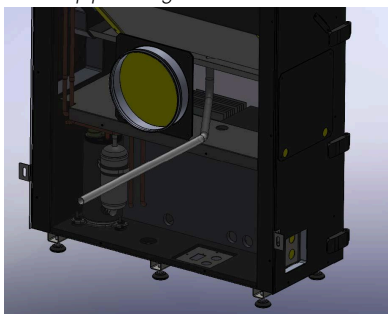

2.3 Key features

No outdoor unit
The single package design means that there is no outdoor unit, freeing up space on rooftops and at ground level and enabling installations in buildings without space for an outdoor unit.

Twin rotary BLDC inverter compressor
The state-of-the-art, twin, rotary Brushless DC (BLDC) inverter compressor operates efficiently, quietly, and with minimal vibration. AIO®'s Vertical Stack unit is ideal for any room or area that requires between 3,400 and 15,000 Btu/h of cooling capacity, or between 4,200 and 15,000 Btu/h of heating capacity. AIO®

High-efficiency ECM fans with auto ESP
High-efficiency electronically commutated motor (ECM) fans enable efficient and quiet operation because the EC motor can ramp up or down as required. Automatically adjusted external static pressure ensures correct airflow.

Cold climate heat pump
The heat pump efficiently functions in temperatures as low as 5°F (-15°C) outdoors and continues to operate at colder temperatures, even below -5°F (-20.6°C).

2,700-watt electric heat
The electric heat works in conjunction with the heat pump when the heat pump has insufficient power.

Intelligent defrosting
AIO®'s intelligent defrosting system means more time heating and less time on reverse cycle defrost.

Coil cooling system
The condensate mist system drizzles the condensate on the outdoor heat exchanger coils, lowering the coil's temperature and increasing efficiency and performance.

Quiet
With whisper-quiet operation as low as 27 decibels, the occupant will barely notice that the AIO® Vertical stack is operating.

No outside noise infiltration
AIO® has the lowest Sound Transmission Class (STC) and Outdoor-Indoor Transmission Class (OITC) rating among comparable units. This means less outside noise intrudes into the room day and night.

Versatile on/off options
AIO®'s low-voltage connection enables connection to any Building Management System (BMS), key-card system, window sensors, fire alarms, etc. As long as a system can send a signal to the AIO® unit via low voltage, the unit can be easily turned on or off.

Minimal clearances and compact footprint
AIO®'s compact form does not use any line sets. This means that there is no need to access the sides of the unit. You can mount units with as little as 2.0" (50.8 mm) clearance on all sides.

Leak protection
If a drain becomes clogged, the system shuts down and activates an alarm, preventing water damage.

Easy to service
The AIO® unit can be easily maintained and repaired from the front or bottom of the unit without having to remove the unit from the wall. An AIO® unit can also be quickly swapped with a replacement, reducing downtime.

Versatile controls
The AIO® unit includes an onboard touch controller and an optional iOS and Android app. AIO® can be used with optional wall-mounted controllers, including a Thin Film Transistor (TFT) with a 7-day program, and third-party controllers from any company, using the optional third-party kit. An optional BACnet and Modbus module enables interfacing with building management systems.

2.4 Optional accessory: Rough-in Box

The optional rough-in box simplifies Vertical Stack installation and servicing. Installed before the unit, it provides direct connections for ductwork and utilities, allowing the unit to be installed, removed, or replaced without disconnecting these connections.

The rough-in box is not included with the unit and can be ordered separately.

To view the product data sheet for the rough-in box, click the link below:

AIO Vertical Stack (Gen 4) Rough-in Box Product ...

Figure 6. Vertical Stack Rough-in Box

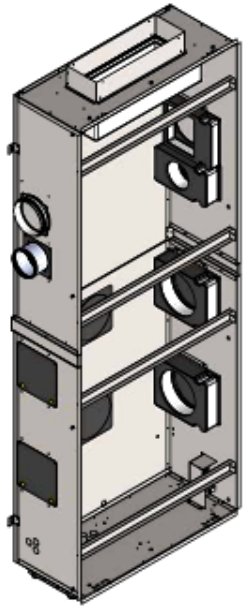

3. AIRFLOW

3.1 Airflow operation

The AIO® Vertical Stack unit provides a high degree of flexibility. It can be fully ducted or used with minimal or no ducting. This enables the AIO® Vertical stack to be placed anywhere in a dwelling, with no restrictions.

- **Supply air**
  The front, rectangular 7.2" (184 mm) x 20.3" (515 mm) supply air connection is ideal for a supply grille. With 0.6" WC (149.5 Pa) external static pressure (combined between return and supply), the top rectangular 6.5" (166 mm) x 19.6" (497 mm) supply air connection is ideal for ducting to one or more rooms. For added flexibility, it is possible to duct part of the airflow through the top and direct-vent the remainder through the front for ducting multiple rooms with minimal ductwork.
- **Return air**
  The left and right side 6" (152.4 mm) round connections can be ducted to one or more rooms with up to 0.6" WC (149.5 Pa) external static pressure (combined between return and supply). Each connection is fully independent and served by its own ECM fan with automatic external static pressure (ESP) control.

  For optimal performance, a fully ducted return configuration is recommended. Both return air openings must remain open and unobstructed during operation. The unit may be installed with both returns ducted, or with one return ducted and the other left open as a side plenum return.
- **Outside air intake**
  The single 8" (203.2 mm) round outside air intake connection can be accessed from the left, right, or rear and provides outside air for the condenser portion and fresh air. This can be ducted with up to 0.7" WC (174.4 Pa) external static pressure (combined between intake and exhaust).
- **Outside air exhaust**
  The single 8" (203.2 mm) round exhaust air connection can be accessed from the left, right, or rear, and exhausts the stale and condenser air. This can be ducted with up to 0.7" WC (174.4 Pa) external static pressure (combined between intake and exhaust).
- **Mix and match outside connections for total flexibility.**
  The upper outside connection (left, right, and rear) is for intake, and the outside lower connection (left, right, and rear) is for exhaust. It's possible to use any combination of connections. For example: Left for intake and rear for exhaust, or rear for intake and right for exhaust, etc.

3.2 Airflow diagram

Figure 7. Airflow

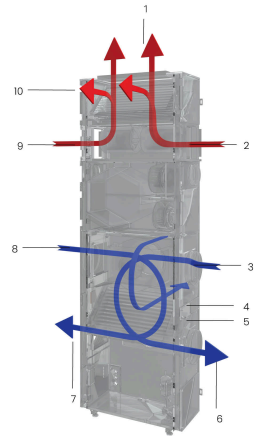

■ Outside air ■ Recirculate air

1	Top supply	**6**	Side exhaust
2	Return	**7**	Side exhaust
3	Side intake	**8**	Side intake
4	Rear intake	**9**	Return
5	Rear exhaust	**10**	Front supply

3.3 Fan coil part

Figure 8. Fan Coil Part

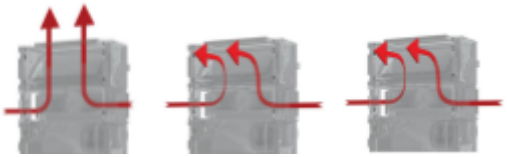

Supply: **Top**
Return: **Left & Right**

Supply: **Top**
Return: **Left & Right**

Supply: **Front**
Return: **Left & Right**

Recirculate air

3.4 Condenser part

Figure 9. Condenser Part



Intake: **Left**
Exhaust: **Left**

Intake: **Right**
Exhaust: **Right**

Intake: **Rear**
Exhaust: **Rear**



Intake: **Left**
Exhaust: **Right**

Intake: **Right**
Exhaust: **Left**

Intake: **Rear**
Exhaust: **Left**



Intake: **Rear**
Exhaust: **Right**

Intake: **Left**
Exhaust: **Rear**

Intake: **Right**
Exhaust: **Rear**

Outside air

3.5 Fan curves

The following graphs illustrate airflow versus external static pressure at low, medium, and high fan speeds.

Figure 10. Indoor fan performance curves

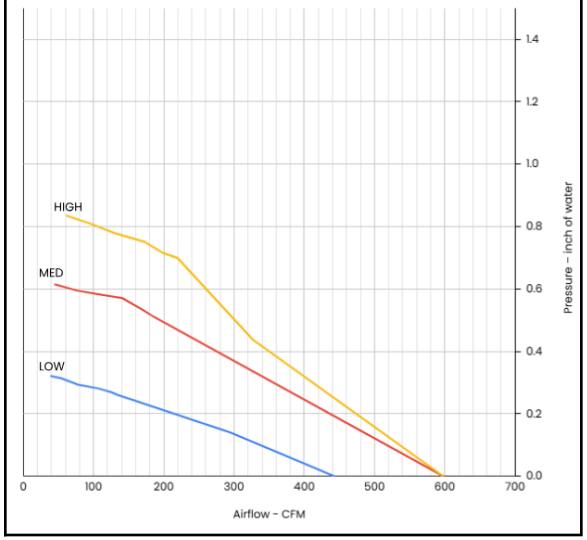

Figure 11. Lateral outdoor fan performance curves

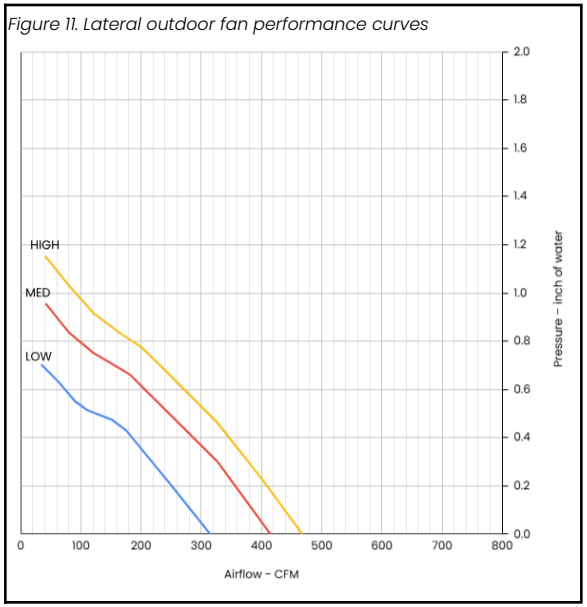

Figure 12. Rear outdoor fan performance curves

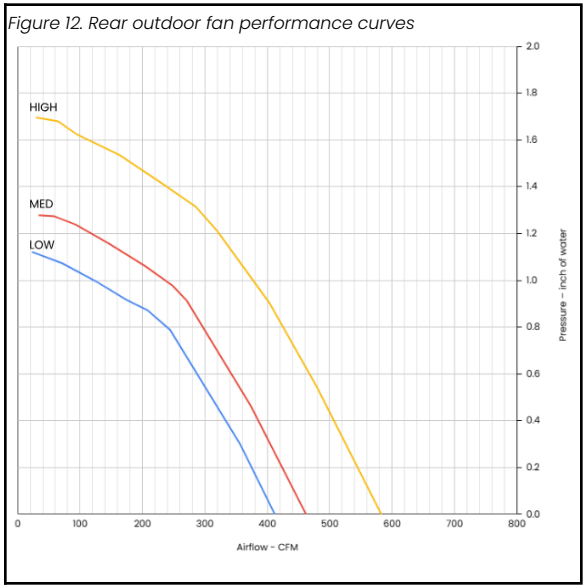

4. INSTALLATION REQUIREMENTS

Figure 13. Installation

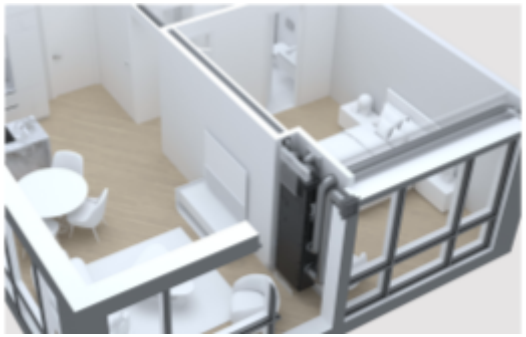

Figure 14. Shared supply and exhaust vents



Figure 15. Right and left external vents



4.1 Air balancing requirements

- All units must be properly air-balanced by a qualified professional air-balancing company.
- Air balancing must be performed after installation and prior to final commissioning.
- A formal air balancing report must be completed and made available.
- Failure to properly perform air balancing may result in poor performance, system issues, and voiding of the warranty.

4.2 Low ambient heating configuration requirement

To configure the unit for electric resistance heating in low ambient conditions (below 5°F/-15°C):

1. Turn on the unit.
2. Press and hold ☼ for 10 seconds until "Fh" appears on the display.
3. Press and hold ☼ for 5-10 seconds until "Fo" appears on the display.
4. Press and hold ☼ for 5-10 seconds until "rE" appears on the display.
5. Wait a few seconds (without pressing any buttons) to exit the menu.

rE = Resistance heat mode

This setting switches the unit to electric resistance heating during low ambient conditions, preventing heat pump operation that may contribute to ice formation.

4.3 Startup airflow commissioning

Units require startup airflow commissioning. Select the indoor/outdoor airflow program to match the installed duct configuration and external static pressure.See the Installation Manual for detailed setup and measurement procedures.

4.4 Ambient temperature protection

When installed in climates with ambient temperatures below freezing, the unit must be located in an enclosed, temperature-protected indoor space that will not fall below 5°F (-15°C).

Secure any installation site insulation so that it cannot detach or be drawn into the unit's air openings.
Failure to secure insulation may lead to unit damage and will void the warranty.

4.5 Site requirements

Note: Refer to the Installation manual for complete installation requirements and specifications.

- Where practical, avoid installing the unit in a location exposed to direct sunlight. Solar heating may cause the room-air temperature sensor to detect a temperature higher than the actual room temperature, resulting in improper temperature control, unnecessary cooling operation, reduced heating output, and decreased energy efficiency.
- An electrical supply with a grounded 3-prong receptacle.
- A power supply circuit installed in accordance with the current edition of NEC (ANSI/NFPA 70) and local codes and ordinances

  Note: Always consult local and national electrical codes.
- A power supply with a voltage rating of 60 Hz, single phase, in 115V or 208/230V in accordance with the model specified.

- Do not operate the unit in or near a construction or renovation site. Dust and debris can enter the unit, causing malfunctions and reduced performance.

- All responsible parties must verify that the electrical supply is properly grounded, free of excessive electrical noise, and within the specified voltage and frequency limits before energizing the unit. Failure to correct power quality issues, including voltage instability or electrical noise, may result in equipment damage and will void the warranty for affected components.
- A properly installed condensate drain line.
- An internal condensate drain line is highly recommended.
- If using an externally run condensate line, note the following:
    - The line must be properly insulated
    - The line must have a minimum slope of 2%.
    - If on a low floor, ensure that the end of the drain is above the maximum height of snow buildup.
- The factory-installed condensate drain is a ⅝" flexible drain pipe. To extend the drain line, insert the flexible pipe into a larger ¾" PVC or equivalent plumbing pipe and secure it using an external clamp or approved method. Do not use internal couplings or barbed fittings that reduce the internal diameter of the drain line, as this may restrict flow and lead to drainage issues.
- Interior clearances are only required to prevent vibrations. Leave at least 2" (50.8 mm) of clearance from any surface. All other clearances are dependent on ducting.
- Approved louvers must be installed with best practices to ensure that no water enters the wall assembly.
- The unit is intended for ducted installation. Installation without ductwork may result in airflow performance issues.
- 8" (203.2 mm) diameter ducts through the wall, which protrude 1/8" (3.2 mm) into the unit's ePDM backing to ensure a tight seal.
- The unit must be perfectly level on the horizontal axis and perfectly plumb on the vertical axis.
- The unit must be attached to the ducts tightly, with zero leakage between the external ducts and the unit. If the wall is not plumb, use insulating material.
- The unit must be properly affixed with screws to wall studs or other supporting material.
- Unblocked vents on the exterior and no obstacles within 36" (914.4 mm).
- An access panel with adequate clearance to the entire front of the unit for servicing.
- The outside air intake duct is intended to be installed as insulated ducting (with a minimum of R-8 insulation). Insulation reduces thermal losses during cooling operation and helps prevent freezing and condensation during heating operation, which may result in equipment or property damage.
- Vertical stack units are intended to be installed within an insulated closet that is thermally coupled to the conditioned space. Insulating the closet helps prevent exposure to extreme outdoor temperatures and limits temperature stratification, ensuring the unit reflects indoor conditions and reducing the risk of inaccurate temperature readings during both heating and cooling operations.
- INNOVA provides a mounting template to facilitate the installation process.

4.6 Louver specifications

AIO® Vertical stack units can be vented using many kinds of custom and creative solutions. The possibilities are endless, from perforated panels to custom louvers.

There are two critical factors when selecting and sizing a solution that works with AIO® Vertical Stack units.

- **Free area:** The area on a louver/grille that is open for the air to flow through. The louver, perforated panel, or other solution must have at least the amount of free area specified in the specifications below in the plenum from the unit, so that ample air can enter and exit the condenser chamber. A more restrictive solution with a smaller free area can be utilized by enlarging the louver and plenum until the required free area is achieved.

  The minimum free area required is 0.34 square feet (0.03 m^2) for the intake vent and 0.34 square feet (0.03 m^2) for the exhaust vent.
- **Pressure drop:** Pressure drop is the resistance the louver/grille creates against the airflow. This resistance can create heat build-up inside the condenser portion, causing the compressor to overheat and shut down. A solution with a higher pressure drop than specified can be utilized by enlarging the louver and plenum until the pressure drop is within specification.

  The maximum total pressure for the intake and exhaust ducting (if any) and intake and exhaust louvers combined must be under 0.7" WC (174.4 Pa).

  To be clear, the entire assembly of ductwork, plenums, and louvers for the complete air circuit, in and out of the system, may not exceed 0.7" WC (174.4 Pa).

Any louver or louver assembly must meet these requirements, because exceeding these limits can cause the unit to overheat and fail. This will void the warranty.

The following louvers are approved for AIO® Vertical stack units:

- **Sunvent**: LLA/C, LLA/F, LLA/S - available through your INNOVA distributor.
- **Thermaduct**: RLA8 - available through your INNOVA distributor.

4.7 Clearance requirements

The AIO® Vertical stack unit's clearance will depend on how it is vented. Carefully read the criteria below to determine the correct clearance required.

- **Ceiling**
  There must be a 2" (50.8 mm) minimum clearance between the unit and the ceiling to minimize noise from vibrations and for removing panels. If ducting through the top, ensure sufficient clearance to attach ductwork to the vent.
- **Bottom**
  There must be a minimum of 1" (25.4 mm) clearance between the unit and the floor to minimize noise from vibrations. The unit sits on adjustable leveling legs, which can be removed to hang the unit on the wall.
- **Access Panel**
  There must be an access panel of at least the size of the unit plus 2" (50.8 mm) all around. The recommended size is 92" (2336.8 mm) x 33" (838.2 mm). The minimum size is 90" (2286 mm) x 32" (812.8 mm). You can integrate a return and supply grille into the access panel door.
- **Sides**
  The clearance required on the sides is dependent on how the unit is configured for return and stale exhaust air.
- **Side ducted return configuration**
  The clearance required is based solely on ductwork design. Ensure sufficient clearance to be able to attach the ductwork to the side return.

Figure 16. Side ducted return configuration

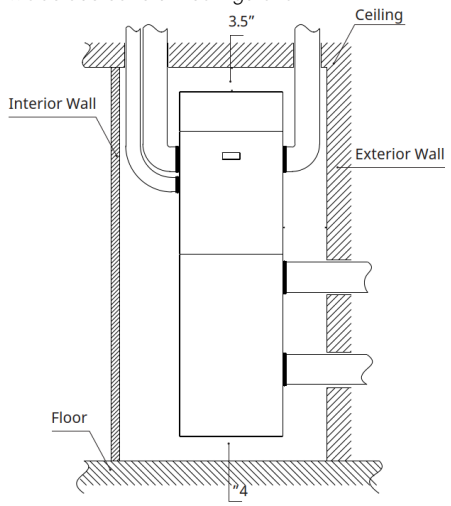

- **Side non-ducted configuration**
  A minimum of 2.5" (63.5 mm) should be free for airflow on each side, to allow the air to flow into the returns.

Figure 17. Side plenum return configuration

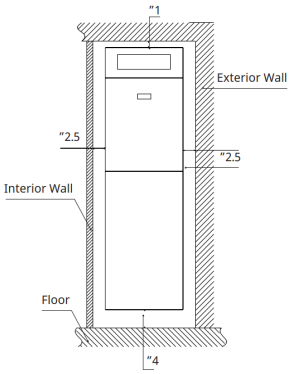

- **Front**
  The clearance required in front of the unit to the access panel is 2" (50.8 mm) to minimize noise from vibrations.
- **Rear**
  There must be a 2" (50.8 mm) minimum clearance between the unit and the wall to minimize noise from vibrations. If ducting the intake and exhaust from the rear, ensure sufficient clearance to attach the ductwork to the rear vents. Ensure that rear external vents do not have any barrier or wall for at least 40" (1016 mm).

Figure 18. Rear

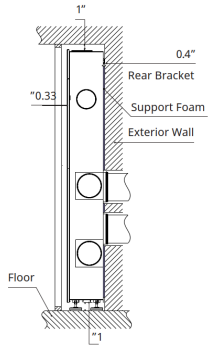

5. TECHNICAL SPECIFICATIONS

5.1 High Performance

5.1.1 Cooling

Table 1. High Performance - Cooling

Heat Pump only			95°F (35°C) (1)	105°F (40.6°C) (2)	115°F (46.1°C) (3)
Capacity	Maximum	BTU/hr	14,400	13,100	11,800
	Recommended*		9,790	8,500	7,800
	Rated		8,900	7,609	6,920
	Minimum		3,600	3,600	3,400
Input Power	Maximum	W	1,750	1,680	1,750
	Recommended*		953	970	1,060
	Rated		813	845	925
	Minimum		250	275	300
Efficiency	Maximum	EER	8.23	7.80	6.74
	Recommended*		10.27	8.80	7.40
	Rated	EER2	10.95	9.00	7.47
	Seasonal	SEER2	14.35	-	-
Moisture Removal		Pts/h	1.8	2.0	2.2
		L/hr	0.85	0.95	1.04

Notes
(1) ID: 80°F(26.7°C), W.B. 67°F(19.4°C) | OD: 95°F(35°C), W.B. 75°F(23.9°C)
(2) ID: 80°F(26.7°C), W.B. 67°F(19.4°C) | OD: 105°F(40.6°C), W.B. 75°F(23.9°C)
(3) ID: 80°F(26.7°C), W.B. 67°F(19.4°C) | OD: 115°F(46.1°C), W.B. 75°F(23.9°C)
* This is the recommended capacity for sizing the unit to the space.

5.1.2 Heating

Table 2. High Performance - Heating

Heat Pump only			47°F (8.3 °C) (1)	17°F (-8.3 °C) (2)	5°F (-15°C) (3)	0°F (-17.8° C) (4)	-5°F (-20.6 °C) (5)
Capacity	Maximum	BTU/ hr	13,800	9,400	6,700	6,400	6,000
	Recomm-ended*		10,000	9,000	6,500	6,127	5,800
	Rated		8,900	9,000	6,500	6,127	5,800
	Minimum		3,900	3,300	2,800	2,700	2,700
Input Power	Maximum	W	1,750	1,750	1,750	1,650	1,450
	Recomm-ended*		820	1,148	1,108	1,075	1,036
	Rated		712	1,146	1,108	1,075	1,036
	Minimum		420	440	460	480	500
Efficiency	Maximum	COP	2.31	1.57	1.12	1.14	1.21
	Recomm-ended*		3.60	2.30	1.72	1.67	1.64
	Rated		3.66	2.30	1.72	1.67	1.64
	Minimum		2.72	2.20	1.78	1.65	1.58
	Seasonal	HSPF2	9.85	-	-	-	-

Notes
(1) ID: 70°F(21.1°C), W.B. 60°F(15.6°C) | OD: 47°F(8.3°C), W.B. 43°F(6.1°C)
(2) ID: 70°F(21.1°C), W.B. 60°F(15.6°C) | OD: 17°F(-8.3°C), W.B. 15°F(-9.4°C)
(3) ID: 70°F(21.1°C), W.B. 60°F(15.6°C) | OD: 5°F(-15°C), W.B. 3°F(-16.1°C)
(4) ID: 70°F(21.1°C), W.B. 60°F(15.6°C) | OD: 0°F(-17.8°C)
(5) ID: 70°F(21.1°C), W.B. 60°F(15.6°C) | OD: -5°F(-20.6°C)
* This is the recommended capacity for sizing the unit to the space.

Optional adjustable heat strips are available for up to an additional 9,200 BTU/hr heating capacity.

Unit performance decreases by approximately 3-4% per 1000 feet (305 meters) elevation above sea level.

5.2 Energy Star Compliant

5.2.1 Cooling

Table 3. Energy Star Compliant - Cooling

Heat Pump only			95°F (35°C) (1)	105°F (40.6°C) (2)	115°F (46.1°C) (3)
Capacity	Maximum	BTU/hr	14,400	13,100	11,800
	Rated*		7,500	7,609	6,920
	Minimum		3,600	3,600	3,400
Input Power	Maximum	W	1,750	1,680	1,750
	Rated*		647	845	925
	Minimum		250	275	300
Efficiency	Maximum	EER	8.23	7.80	6.74
	Rated*	EER2	11.60	9.00	7.47
	Seasonal	SEER2	15.35	-	-
Moisture Removal		Pts/h	1.8	2	2.2
		L/hr	0.85	0.95	1.04

Notes
(1) ID: 80°F(26.7°C), W.B. 67°F(19.4°C) | OD: 95°F(35°C), W.B. 75°F(23.9°C)
(2) ID: 80°F(26.7°C), W.B. 67°F(19.4°C) | OD: 105°F(40.6°C), W.B. 75°F(23.9°C)
(3) ID: 80°F(26.7°C), W.B. 67°F(19.4°C) | OD: 115°F(46.1°C), W.B. 75°F(23.9°C)
* This capacity level is designed to meet Energy Star compliance requirements while supporting optimal energy performance.

5.2.2 Heating

Table 4. Energy Star Compliant - Heating

Heat Pump			47°F (8.3 °C) (1)	17°F (-8.3 °C) (2)	5°F (-15°C) (3)	0°F (-17.8 °C) (4)	-5°F (-20.6 °C) (5)
Capacity	Maximum	BTU/hr	13,800	9,400	6,700	6,400	6,000
	Rated*		8,200	8,900	6,400	6,127	5,800
	Minimum		3,900	3,300	2,800	2,700	2,700
Input Power	Maximum	W	1,750	1,750	1,750	1,650	1,450
	Rated*		656	1,132	1,072	1,075	1,036
	Minimum		420	440	460	480	500
Efficiency	Maximum	COP	2.31	1.57	1.12	1.14	1.21
	Rated*		3.66	2.30	1.75	1.67	1.64
	Minimum		2.72	2.20	1.78	1.65	1.58
	Seasonal	HSPF2	9.85	-	-	-	-

Notes

(1) ID: 70°F(21.1°C), W.B. 60°F(15.6°C) | OD: 47°F(8.3°C), W.B. 43°F(6.1°C)
(2) ID: 70°F(21.1°C), W.B. 60°F(15.6°C) | OD: 17°F(-8.3°C), W.B. 15°F(-9.4°C)
(3) ID: 70°F(21.1°C), W.B. 60°F(15.6°C) | OD: 5°F(-15°C), W.B. 3°F(-16.1°C)
(4) ID: 70°F(21.1°C), W.B. 60°F(15.6°C) | OD: 0°F(-17.8°C)
(5) ID: 70°F(21.1°C), W.B. 60°F(15.6°C) | OD: -5°F(-20.6°C)
* This capacity level is designed to meet Energy Star compliance requirements while supporting optimal energy performance.

Optional adjustable heat strips are available for up to an additional 9,200 BTU/hr heating capacity.

Unit performance decreases by approximately 3-4% per 1000 feet (305 meters) elevation above sea level.

5.3 Airflow

5.3.1 Indoor

Table 5. Airflow - Indoor

Air volume		
Indoor	Type	ECM centrifugal
	CFM	226 - 400
	m^3/hr	384 - 680
	Available ESP	N/A
	Supply connection	Integrated front
	Return connection	Integrated bottom
	Speeds	Low, med, high, boost, auto
	Filter	MERV 3, optional MERV 8/13

Figure 19. MERV Filter Pressure Drop

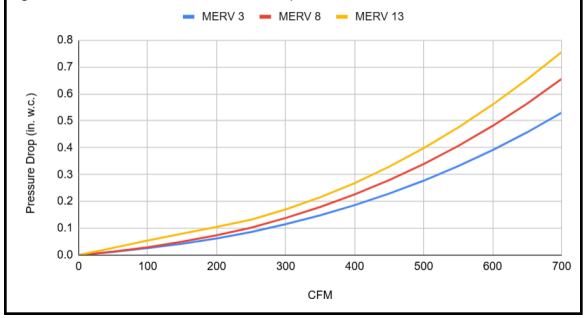

5.3.2 Outdoor

Table 6. Airflow - Outdoor

Air volume		
Outdoor	Type	ECM centrifugal
	CFM	385 - 638
	m^3/hr	654 - 1084
	Available ESP	0.7" WC (174.2 Pa)
	Intake and Exhaust Connection	8" (203 mm) round
	Speeds	Low, med, high, auto

5.4 Sound

Table 7. Sound

Sound			
Location	Distance	Fan Speed	Sound Level (dB(A))
Indoor	1 m	Level 1 - Low	40
		Level 2 - Medium	49
		Level 3 - High	50
	3 m	Level 1 - Low	32
		Level 2 - Medium	41
		Level 3 - High	42
Outdoor	-	Range	28 - 55

5.5 General

5.5.1 Controls

Table 8. General - Controls

Controls	
Basic functionality	Dependent on the controller
WiFi	Optional module available
Dry contact	Yes
Power outage restart	Auto-on based on the last setting

5.5.2 Modes

Table 9. General - Modes

Modes	
Operation	Cool + fresh air, cool only, heat + fresh air, heat only, auto
Restricted modes	Heat only, cool only, temperature limiting
Timers	Dependent on the controller

5.5.3 Condensate

Table 10. General - Condensate

Condensate	
Pipe size	3/4" (19 mm) outside diameter
Pipe material	Rubber

5.5.4 Physical

For detailed dimensions, refer to the drawings in Section 8.

Table 11. General - Physical

Physical data			
Dimensions		in	30.04 W x 88.35 H x 12.56 D
		mm	763 W x 2244 H x 319 D
Weight	Net	lb	170
		kg	77.1
	Gross	lb	190
		kg	86.1
Cabinet	Finish		Black covered with dark gray EPDM
	Material		Steel

5.5.5 General

Table 12. General - Compressor

Compressor		
Type	BLDC twin rotary inverter	
Refrigerant	Type	R32
	Quantity	24 oz.
		0.7 kg
Oil Type	Fv50s (ISO 50)	

5.5.6 Insulation

Table 13. General - Insulation

Thermal conductivity at 50°F	0.239 BTU*in/(hr·ft²·°F)
Thermal conductivity at 10°C	0.0344 W/(m·K)

Insulation R-value is determined by dividing the insulation thickness by the thermal conductivity (k-value). Insulation thickness varies by component and configuration.

Figure 20. Insulation Thickness

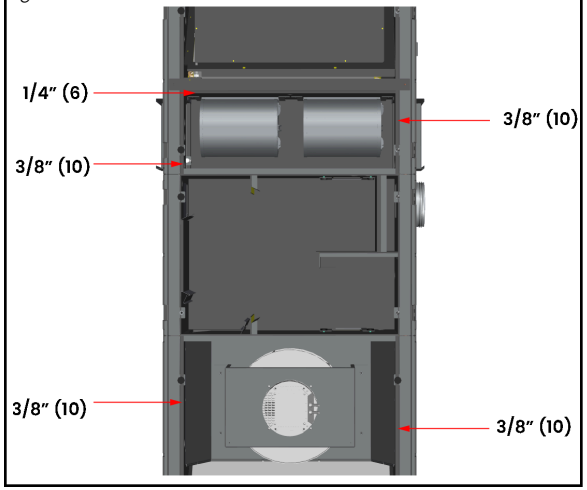

5.6 Electrical

5.6.1 General

Table 14. Electrical - General

General		115V	230V
Volt range		103 - 127	180 - 253
Hz/phase		60 Hz / single phase	
Power input connection		Hardwire	LCDI power cord or hardwire
Power factor		0.96	
Input power (standby)	W	10.8	
Input power (off mode)		1.5	
Heat Pump Only			
Cooling (nominal)	A	15.9	7.9
Cooling (max)		19.0	9.5
Heating - heat pump only (nom.)		15.9	7.9
Heating-heat pump only (max)		19.0	9.5
Heat Pump + 900 W Electric Heater			
Maximum	A	27.2	-
Heat Pump + 1,800 W Electric Heater			
Maximum	A	-	17.3
Heat Pump + 2,700 W Electric Heater			
Maximum	A	-	21.2

Table 15. Electrical - Circuit breakers

Circuit breakers			115V	208V	230V	240V
Heat Pump Only	MCA	A	23	13	11	11
	Recommended breaker size		25	15	15	15
	MOCP		35	15	15	15
Heat Pump + 900W Elec Heat	MCA	A	31	-	-	-
	Recommended breaker size		35	-	-	-
	MOCP		40	-	-	-
Heat Pump + 1,800W Elec Heat	MCA	A	-	20	19	19
	Recommended breaker size		-	20	20	20
	MOCP		-	25	20	20
Heat Pump + 2,700W Elec Heat	MCA	A	-	23	24	24
	Recommended breaker size		-	25	25	25
	MOCP		-	25	25	30

5.6.2 Motors

Table 16. Electrical - Motors

Motors			115V	208V	230V	240V
Compressor	RLA	A	13	6.63	6	5.75
	LRA		13	6.63	6	5.75
Indoor ECM fan motor	Watts (max)	W	200			
	FLA	A	2.4	1.33	1.2	1.15
	Power	HP	1/10			
Outdoor ECM fan motor	Watts (max)	W	320	425	425	425
	FLA	A	3	2.21	2	1.92
	Power	HP	1/10	1/8	1/8	1/8

5.6.3 LCDI power cords

Table 17. Electrical - LCDI Power cords

LCDI Power Cord		115V	230V
Heat Pump Only	Amps	LCDI cord is not available in 115V above 20 A.	15
	Plug Type		6-15P
Heat Pump+1,800 W Elec Heat	Amps		20
	Plug Type		6-20P
Heat Pump+2,700 W Elec Heat	Amps		LCDI cord is not available above 20 A.
	Plug Type		

5.6.4 Heater Output (W) and Heater Current (A) vs. Supply Voltage

Table 18. Heater Output (W) and Heater Current (A) vs. Supply Voltage

Volt/Watt	1000W	900W	1800W	2700W
115V	N/a	900W / 7.8A	N/A	N/A
208V	818W / 3.9A	736W / 3.5A	1472W / 7.1A	2200W / 10.6A
230V	1000W / 4.3A	900W / 3.9A	1800W / 7.8A	2700W / 11.7A
240V	1089W / 4.5A	980W / 4.1A	1960W / 8.2A	3000W / 12.5A

6. LOGIC

6.1 Backup electric heat

The backup electric heater function provides emergency heating while in heating mode if the heat pump becomes unavailable due to a compressor or heat pump alarm. If the heaters are already active, they continue operation; otherwise, the system enables them automatically. Once the alarm condition is cleared and the compressor restarts, the unit returns to normal heat pump operation. This function is only available on units equipped with the optional post-heater.

6.2 Post-heater

The post-heater operates during heating and dehumidification modes to maintain a stable supply air temperature. The heater output is regulated to maintain the target temperature setpoint. Separate temperature setpoints are available for heating and dehumidification modes. These functions are only available on units equipped with the optional post-heater.

6.2.1 Post-heater modes

When the unit is equipped with the optional post-heater, different modes of operation are available.

FH Mode

In this mode, the post-heater operates together with the heat pump when additional heating is required. The post-heater activates when the compressor has been running for at least 20 minutes and the room temperature is still at least 3.6°F (2°C) below the setpoint. If the room temperature rises 1.8°F (1°C) above the setpoint, both the heat pump and post-heater shut off. When the room temperature drops 1.8°F (1°C) below the setpoint, the heat pump restarts and checks the above conditions to determine whether the post-heater should activate.

rE Mode

In this mode, the post-heater is activated to work with the heat pump when all of the following conditions are met:

- The compressor has been running for 30 seconds
- The room temperature is below 75.2°F (24°C)
- The room temperature is at least 3.6°F (2°C) below the setpoint
- The indoor coil temperature is below 111.2°F (44°C)
- The indoor fan motor is on and running at a stable speed
- No room temperature sensor or indoor coil sensor alarms are active

Heating is shut off when any of the following conditions occur:

- The indoor coil temperature exceeds 116.6°F (47°C)
- The room temperature exceeds the setpoint
- The room temperature exceeds 77°F (25°C)
- The internal fan stops or fails
- The compressor shuts down

If night mode is enabled or if the outdoor temperature is below -4°F (20°C), the heat pump is disabled and all heating is provided exclusively by the post-heater. The post-heater turns on when the room temperature is 1.8°F (1°C) below the setpoint, the room temperature is below 80.6°F (27°C), and no alarms are present for the room temperature sensor, indoor coil sensor, or indoor fan motor. The post-heater shuts off when the room temperature rises 1.8°F (1°C) above the setpoint, the room temperature rises above 82.4°F (28°C), or the indoor fan motor stops or fails.

6.3 Dehumidification

During dehumidification, the system operates the compressor and indoor fan in cooling mode while an electric post-heater reheats the supply air to maintain a stable discharge air temperature. Dehumidification activates when the relative humidity exceeds the setpoint by more than 7% and deactivates once the humidity returns to the setpoint. During operation, the post-heater maintains a target supply air temperature, typically fixed at 71.6°F (22°C). Dehumidification is disabled during heating and cooling mode operation, or when the room temperature falls below 50°F (10°C). This function is only available on units equipped with the optional post-heater.

7. WIRING DIAGRAM

To view the diagram as a high-resolution image, click the link below:

AIO Ceiling Ducted-Ceiling Suspended (with ERV ...

Figure 21. Wiring Diagram

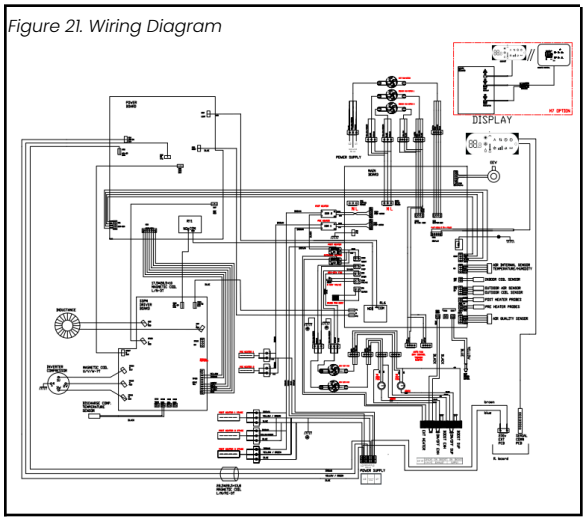

8. DIMENSIONS

To view the dimensions of the AIO® Vertical Stack unit as a high-resolution PDF, click the link below:

AIO Vertical Stack (Gen 4) Dimensions.pdf

Figure 22. Vertical Stack



Figure 23. Vertical Stack Top View

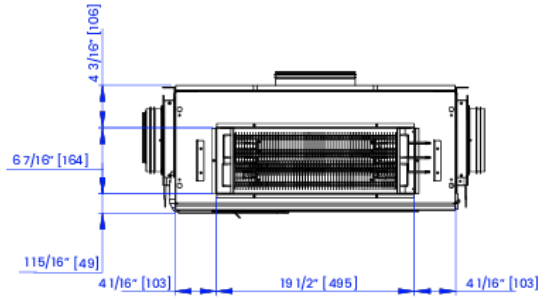

Figure 24. Vertical Stack Left View

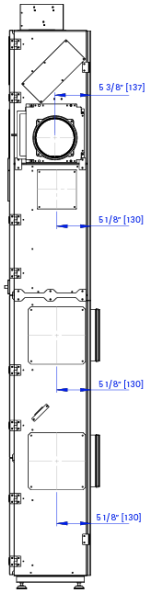

Figure 25. Vertical Stack Front View

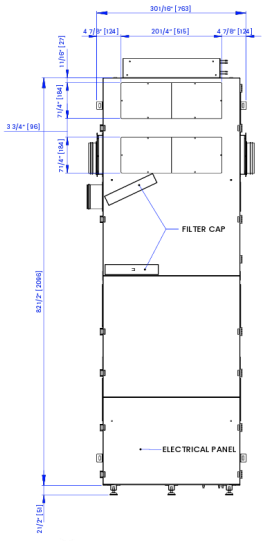

Figure 26. Vertical Stack Right View

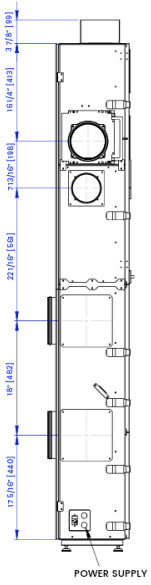

Figure 27. Vertical Stack Rear View

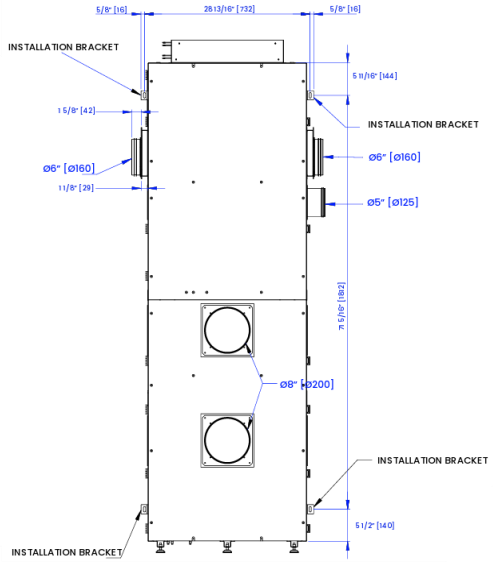

Figure 28. Vertical Stack Bottom View

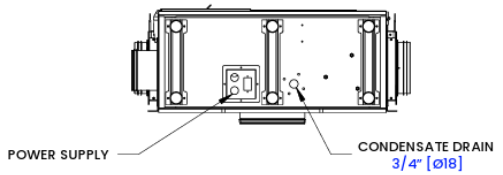

9. WARRANTY

9.1 Basic coverage

- **Parts:** 5 years from delivery.
- **Compressor:** 10 years from delivery.
- **Labor:** 2 years from certification (only if at least 10 units are installed, the site is certified by INNOVA or self-certified, and spare stock equal to 3% of total units is maintained)
- **Controllers:** Covered under a 2-year warranty.

9.2 Optional extended coverage

- **Additional 2-Year Parts & Labor Warranty:** Extends the basic coverage to 4 years labor and 7 years parts.
- **Extended 10-Year Parts Warranty:** Extends parts coverage to 10 years total.
- **Extended 5-Year Full Warranty:** Extends full parts and labor coverage to 5 years total.
- **Extended 10-Year Full Warranty:** Provides a 10-year full warranty on parts, labor, and compressor.
- **Extended 15-Year Full Warranty:** Provides a 15-year full warranty on parts, labor, and compressor.

9.3 Validation requirements

- Installation must be certified by an INNOVA technician or self-certified within 30 days.
- Installers must complete INNOVA training.
- The system must comply with local codes, use approved louvers, and be properly maintained (e.g., clean filters monthly, coils every 18 months).

For warranty service or claims, contact INNOVA Support at vip@innova.co or (212) 204-2700.

For detailed terms and conditions, click the link below:

AIO Warranty Terms and Conditions - 2026 - INN...

10. SUBMITTALS

10.1 115V Heat pump only - High Performance

AIO® VERTICAL STACK - 115V - NO ELECTRIC HEAT - R32 - SUBMITTAL (AVP10N3H1)

Job	Reference	Construction
Location	Approval	Quote Number
Engineer	Date	Drawing Number
Submitted To	Submitted By:	P.O. Number:

General Features

- BLDC inverter compressor
- ECM fans
- R32 Refrigerant
- Auto restart
- Intelligent defrost
- No outdoor unit
- Condensate disbursement systems
- Electronically controlled air louver
- Compact, slim design
- 4 selectable fan speeds + Auto
- 10-Year limited warranty (after certification)
- Made in Italy
- Onboard touch controller
- Washable filter

The installing contractor must contact INNOVA Customer Technical Support prior to installation to schedule an installation training overview.
This may be conducted in person or remotely (online). It is the official installation training and may include videos, best practices, and system requirements.
Performing installations without training may result in installation errors, performance issues, and possible warranty limitations.

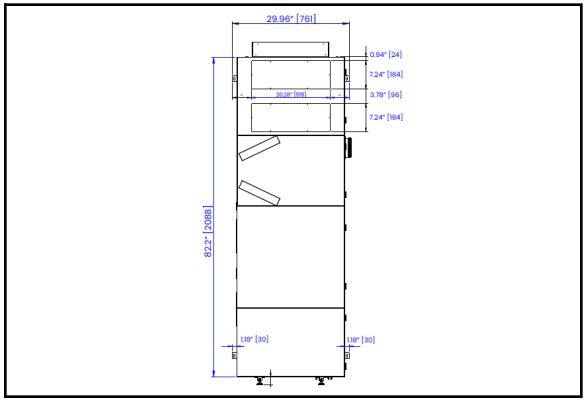

Performance Specifications			
Cooling	Min-Max	BTU/H	3,600 - 14,400
	Rated capacity (95°F [35°C])		8,900
	Efficiency	EER2	10.95
Heating	Min-Max	BTU/H	3,900 - 13,800
	Rated capacity (47°F [8.3°C])		8,900
	Rated capacity (5°F [-15°C])		6,500
	Efficiency	COP	3.66
Sound	Indoor: Low-High at 1 m distance	db(A)	40 - 50
	Indoor: Low-High at 3 m distance		32 - 42
	Outdoor sound range		28 - 55
Moisture removal		Pts/h	1.8
		L/hr	0.9
Airflow	Indoor	CFM	226 - 400
		m^3/hr	384 - 680
	Outdoor	CFM	385 - 638
		m^3/hr	654 - 1084

Electric Specifications	
Power Supply (V/Ph/Hz)	115V/1Ph/60Hz
Voltage Range	103-127
Running Amps Cooling	15.9
Running Amps Heating	15.9
MCA	23
Maximum Overcurrent Protection (A)	35
Max Power Input (amps) Cooling	19.0
Max Power Input (amps) Heating	19.0

Included	Wall Controllers + Gateways	
☐	Wireless Remote	WRCH20
☐	Basic Touch Controller	LTCH20
☐	Recessed Touch Controller	RTCH20
☐	Advanced TFT Controller with 7-Day program	TFTH20
☐	Wireless (AA Battery) Infrared Controller with 7-Day program	WIPT20
☐	Third Party Gateway	TPG015
☐	WiFi App	WIFI30
☐	E-Paper EOS Controller	EEOS12
☐	Simple EOS Controller	SEOS12
☐	Integration gateway for LTCH20, TFTH20 and MODBUS	GWN
☐	Integration gateway for LTCH20, TFTH20, MODBUS, BACnet, and third-party thermostats	GWX

Included	LCDI Power Cords	NEMA	SKU
☐	LCDI is not available over 20A for 115V units		

10.2 115V Heat pump + elec heat - High Performance

AIO® VERTICAL STACK - 115V - 900W ELECTRIC HEAT - R32 - SUBMITTAL (AVE10N3H1)

Job	Reference	Construction
Location	Approval	Quote Number
Engineer	Date	Drawing Number
Submitted To	Submitted By:	P.O. Number:

General Features

- BLDC inverter compressor
- ECM fans
- R32 Refrigerant
- Field configured 900W electric heat supplement
- Auto restart
- Intelligent defrost
- No outdoor unit
- Condensate disbursement systems
- Onboard touch controller
- Washable filter
- Compact, slim design
- 4 selectable fan speeds + Auto
- 10-Year limited warranty (after certification)
- Made in Italy

The installing contractor must contact INNOVA Customer Technical Support prior to installation to schedule an installation training overview.
This may be conducted in person or remotely (online). It is the official installation training and may include videos, best practices, and system requirements.
Performing installations without training may result in installation errors, performance issues, and possible warranty limitations.

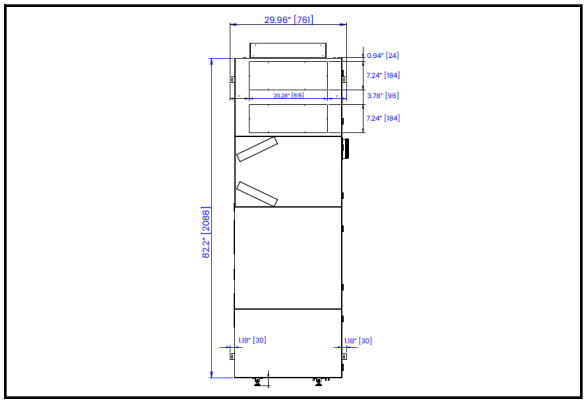

Performance Specifications			
Cooling	Min-Max	BTU/H	3,600 - 14,400
	Rated capacity (95°F [35°C])		8,900
	Efficiency	EER2	10.95
Heating	Min-Max	BTU/H	3,900 - 13,800
	Rated capacity (47°F [8.3°C])		8,900
	Rated capacity (5°F [-15°C])		6,500
	Efficiency	COP	3.66
Sound	Indoor: Low-High at 1 m distance	db(A)	40 - 50
	Indoor: Low-High at 3 m distance		32 - 42
	Outdoor sound range		28 - 55
Moisture removal		Pts/h	1.8
		L/hr	0.9
Airflow	Indoor	CFM	226 - 400
		m^3/hr	384 - 680
	Outdoor	CFM	385 - 638
		m^3/hr	654 - 1084

Electric Specifications	
Power Supply (V/Ph/Hz)	115V/1Ph/60Hz
Voltage Range	103-127
Running Amps Cooling	15.9
Running Amps Heating	15.9
MCA	31
Maximum Overcurrent Protection (A)	40
Max Power Input (amps) Cooling	19.0
Max Power Input (amps) Heating	27.2

Included	Wall Controllers + Gateways	
☐	Wireless Remote	WRCH20
☐	Basic Touch Controller	LTCH20
☐	Recessed Touch Controller	RTCH20
☐	Advanced TFT Controller with 7-Day program	TFTH20
☐	Wireless (AA Battery) Infrared Controller with 7-Day program	WIPT20
☐	Third Party Gateway	TPG015
☐	WiFi App	WIFI30
☐	E-Paper EOS Controller	EEOS12
☐	Simple EOS Controller	SEOS12
☐	Integration gateway for LTCH20, TFTH20 and MODBUS	GWN
☐	Integration gateway for LTCH20, TFTH20, MODBUS, BACnet, and third-party thermostats	GWX

Included	LCDI Power Cords	NEMA	SKU
☐	LCDI is not available over 20A for 115V units		

10.3 230V Heat pump only - High Performance

AIO® VERTICAL STACK - 230V -NO ELECTRIC HEAT - R32 - SUBMITTAL (AVP10N3H2)

Job	Reference	Construction
Location	Approval	Quote Number
Engineer	Date	Drawing Number
Submitted To	Submitted By:	P.O. Number:

General Features

- BLDC inverter compressor
- ECM fans
- R32 Refrigerant
- Auto restart
- Intelligent defrost
- No outdoor unit
- Condensate disbursement systems
- Onboard touch controller
- Washable filter
- Compact, slim design
- 4 selectable fan speeds + Auto
- 10-Year limited warranty (after certification)
- Made in Italy

The installing contractor must contact INNOVA Customer Technical Support prior to installation to schedule an installation training overview.
This may be conducted in person or remotely (online). It is the official installation training and may include videos, best practices, and system requirements.
Performing installations without training may result in installation errors, performance issues, and possible warranty limitations.

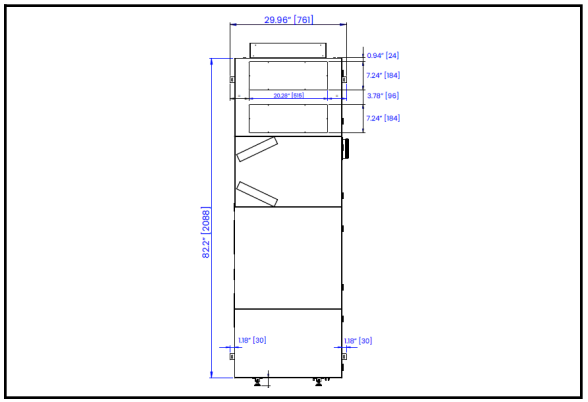

Performance Specifications			
Cooling	Min-Max	BTU/H	3,600 - 14,400
	Rated capacity (95°F [35°C])		8,900
	Efficiency	EER2	10.95
Heating	Min-Max	BTU/H	3,900 - 13,800
	Rated capacity (47°F [8.3°C])		8,900
	Rated capacity (5°F [-15°C])		6,500
	Efficiency	COP	3.66
Sound	Indoor: Low-High at 1 m distance	db(A)	40 - 50
	Indoor: Low-High at 3 m distance		32 - 42
	Outdoor sound range		28 - 55
Moisture removal		Pts/h	1.8
		L/hr	0.9
Airflow	Indoor	CFM	226 - 400
		m^3/hr	384 - 680
	Outdoor	CFM	385 - 638
		m^3/hr	654 - 1084

Electric Specifications	
Power Supply (V/Ph/Hz)	230V/1Ph/60Hz
Voltage Range	180 - 253
Running Amps Cooling	7.9
Running Amps Heating	7.9
MCA	11
Maximum Overcurrent Protection (A)	15
Max Power Input (amps) Cooling	9.5
Max Power Input (amps) Heating	9.5

Included	Wall Controllers + Gateways	
☐	Wireless Remote	WRCH20
☐	Basic Touch Controller	LTCH20
☐	Recessed Touch Controller	RTCH20
☐	Advanced TFT Controller with 7-Day program	TFTH20
☐	Wireless (AA Battery) Infrared Controller with 7-Day program	WIPT20
☐	Third Party Gateway	TPG015
☐	WiFi App	WIFI30
☐	E-Paper EOS Controller	EEOS12
☐	Simple EOS Controller	SEOS12
☐	Integration gateway for LTCH20, TFTH20 and MODBUS	GWN
☐	Integration gateway for LTCH20, TFTH20, MODBUS, BACnet, and third-party thermostats	GWX

Included	LCDI Power Cords	NEMA	SKU
☐	89 in. (2260.6 mm)	6-15P	L259A

10.4 230V Heat pump + 1,800W elec heat - High Performance

AIO® VERTICAL STACK - 230V - 1,800W ELECTRIC HEAT STRIP - R32 -SUBMITTAL (AVK10N3H2)

Job	Reference	Construction
Location	Approval	Quote Number
Engineer	Date	Drawing Number
Submitted To	Submitted By:	P.O. Number:

General Features

- BLDC inverter compressor
- ECM fans
- R32 Refrigerant
- Field configured 900W or 1,800W electric heat supplement
- Auto restart
- Intelligent defrost
- No outdoor unit
- Condensate disbursement systems
- Onboard touch controller
- Washable filter
- Compact, slim design
- 4 selectable fan speeds + Auto
- 10-Year limited warranty (after certification)
- Made in Italy

The installing contractor must contact INNOVA Customer Technical Support prior to installation to schedule an installation training overview.
This may be conducted in person or remotely (online). It is the official installation training and may include videos, best practices, and system requirements.
Performing installations without training may result in installation errors, performance issues, and possible warranty limitations.

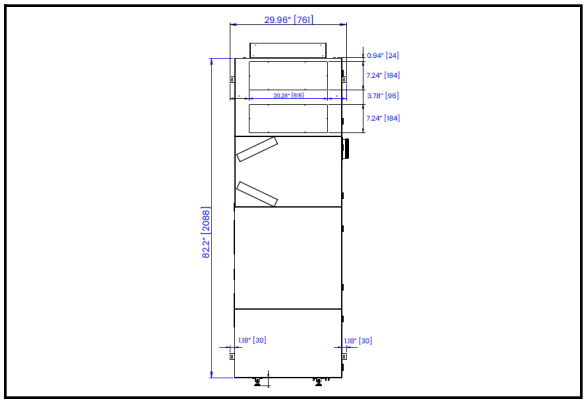

Performance Specifications			
Cooling	Min-Max	BTU/H	3,600 - 14,400
	Rated capacity (95°F [35°C])		8,900
	Efficiency	EER2	10.95
Heating	Min-Max	BTU/H	3,900 - 13,800
	Rated capacity (47°F [8.3°C])		8,900
	Rated capacity (5°F [-15°C])		6,500
	Efficiency	COP	3.66
Sound	Indoor: Low-High at 1 m distance	db(A)	40 - 50
	Indoor: Low-High at 3 m distance		32 - 42
	Outdoor sound range		28 - 55
Moisture removal		Pts/h	1.8
		L/hr	0.9
Airflow	Indoor	CFM	226 - 400
		m^3/hr	384 - 680
	Outdoor	CFM	385 - 638
		m^3/hr	654 - 1084

Electric Specifications	
Power Supply (V/Ph/Hz)	230V/1Ph/60Hz
Voltage Range	180 - 253
Running Amps Cooling	7.9
Running Amps Heating	7.9
MCA	19
Maximum Overcurrent Protection (A)	20
Max Power Input (amps) Cooling	9.5
Max Power Input (amps) Heating	17.3

Included	Wall Controllers + Gateways	
☐	Wireless Remote	WRCH20
☐	Basic Touch Controller	LTCH20
☐	Recessed Touch Controller	RTCH20
☐	Advanced TFT Controller with 7-Day program	TFTH20
☐	Wireless (AA Battery) Infrared Controller with 7-Day program	WIPT20
☐	Third Party Gateway	TPG015
☐	WiFi App	WIFI30
☐	E-Paper EOS Controller	EEOS12
☐	Simple EOS Controller	SEOS12
☐	Integration gateway for LTCH20, TFTH20 and MODBUS	GWN
☐	Integration gateway for LTCH20, TFTH20, MODBUS, BACnet, and third-party thermostats	GWX

Included	LCDI Power Cords	NEMA	SKU
☐	89 in. (2260.6 mm)	6-20P	L229A

10.5 230V Heat pump + 2,700W elec heat - High Performance

AIO® VERTICAL STACK - 230V - 2,700W ELECTRIC HEAT STRIP - R32 -SUBMITTAL (AVL10N3H2)

Job	Reference	Construction
Location	Approval	Quote Number
Engineer	Date	Drawing Number
Submitted To	Submitted By:	P.O. Number:

General Features

- BLDC inverter compressor
- ECM fans
- R32 Refrigerant
- Field configured 2,700W electric heat supplement
- Auto restart
- Intelligent defrost
- No outdoor unit
- Condensate disbursement systems
- Onboard touch controller
- Washable filter
- Compact, slim design
- 4 selectable fan speeds + Auto
- 10-Year limited warranty (after certification)
- Made in Italy

The installing contractor must contact INNOVA Customer Technical Support prior to installation to schedule an installation training overview.
This may be conducted in person or remotely (online). It is the official installation training and may include videos, best practices, and system requirements.
Performing installations without training may result in installation errors, performance issues, and possible warranty limitations.

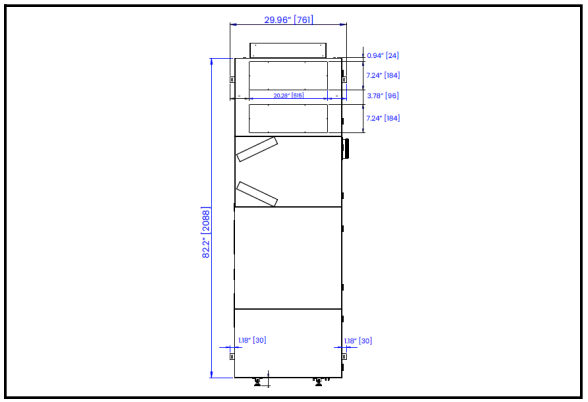

Performance Specifications			
Cooling	Min-Max	BTU/H	3,600 - 14,400
	Rated capacity (95°F [35°C])		8,900
	Efficiency	EER2	10.95
Heating	Min-Max	BTU/H	3,900 - 13,800
	Rated capacity (47°F [8.3°C])		8,900
	Rated capacity (5°F [-15°C])		6,500
	Efficiency	COP	3.66
Sound	Indoor: Low-High at 1 m distance	db(A)	40 - 50
	Indoor: Low-High at 3 m distance		32 - 42
	Outdoor sound range		28 - 55
Moisture removal		Pts/h	1.8
		L/hr	0.9
Airflow	Indoor	CFM	226 - 400
		m^3/hr	384 - 680
	Outdoor	CFM	385 - 638
		m^3/hr	654 - 1084

Electric Specifications	
Power Supply (V/Ph/Hz)	230V/1Ph/60Hz
Voltage Range	180 - 253
Running Amps Cooling	7.9
Running Amps Heating	7.9
MCA	24
Maximum Overcurrent Protection (A)	25
Max Power Input (amps) Cooling	9.5
Max Power Input (amps) Heating	21.2

Included	Wall Controllers + Gateways	
☐	Wireless Remote	WRCH20
☐	Basic Touch Controller	LTCH20
☐	Recessed Touch Controller	RTCH20
☐	Advanced TFT Controller with 7-Day program	TFTH20
☐	Wireless (AA Battery) Infrared Controller with 7-Day program	WIPT20
☐	Third Party Gateway	TPG015
☐	WiFi App	WIFI30
☐	E-Paper EOS Controller	EEOS12
☐	Simple EOS Controller	SEOS12
☐	Integration gateway for LTCH20, TFTH20 and MODBUS	GWN
☐	Integration gateway for LTCH20, TFTH20, MODBUS, BACnet, and third-party thermostats	GWX

Included	LCDI Power Cords	NEMA	SKU
☐			

10.6 115V Heat pump only - Energy Star Compliant

AIO® VERTICAL STACK - 115V - NO ELECTRIC HEAT - R32 - SUBMITTAL (AVP09N3H1)

Job	Reference	Construction
Location	Approval	Quote Number
Engineer	Date	Drawing Number
Submitted To	Submitted By:	P.O. Number:

General Features

- BLDC inverter compressor
- ECM fans
- R32 Refrigerant
- Auto restart
- Intelligent defrost
- No outdoor unit
- Condensate disbursement systems
- Onboard touch controller
- Washable filter
- Electronically controlled air louver
- Compact, slim design
- 4 selectable fan speeds + Auto
- 10-Year limited warranty (after certification)
- Made in Italy

The installing contractor must contact INNOVA Customer Technical Support prior to installation to schedule an installation training overview.
This may be conducted in person or remotely (online). It is the official installation training and may include videos, best practices, and system requirements.
Performing installations without training may result in installation errors, performance issues, and possible warranty limitations.

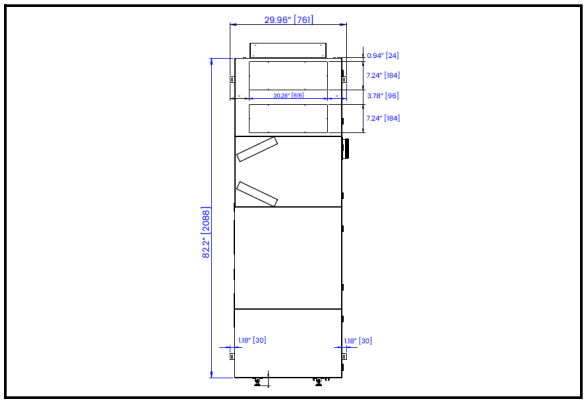

Performance Specifications			
Cooling	Min-Max	BTU/H	3,600 - 14,400
	Rated capacity (95°F [35°C])		7,500
	Efficiency	EER2	11.6
Heating	Min-Max	BTU/H	3,900 - 13,800
	Rated capacity (47°F [8.3°C])		8,200
	Rated capacity (5°F [-15°C])		6,400
	Efficiency	COP	3.66
Sound	Indoor: Low-High at 1 m distance	db(A)	40 - 50
	Indoor: Low-High at 3 m distance		32 - 42
	Outdoor sound range		28 - 55
Moisture removal		Pts/h	1.8
		L/hr	0.9
Airflow	Indoor	CFM	226 - 400
		m^3/hr	384 - 680
	Outdoor	CFM	385 - 638
		m^3/hr	654 - 1084

Electric Specifications	
Power Supply (V/Ph/Hz)	115V/1Ph/60Hz
Voltage Range	103-127
Running Amps Cooling	15.9
Running Amps Heating	15.9
MCA	23
Maximum Overcurrent Protection (A)	35
Max Power Input (amps) Cooling	19.0
Max Power Input (amps) Heating	19.0

Included	Wall Controllers + Gateways	
☐	Wireless Remote	WRCH20
☐	Basic Touch Controller	LTCH20
☐	Recessed Touch Controller	RTCH20
☐	Advanced TFT Controller with 7-Day program	TFTH20
☐	Wireless (AA Battery) Infrared Controller with 7-Day program	WIPT20
☐	Third Party Gateway	TPG015
☐	WiFi App	WIFI30
☐	E-Paper EOS Controller	EEOS12
☐	Simple EOS Controller	SEOS12
☐	Integration gateway for LTCH20, TFTH20 and MODBUS	GWN
☐	Integration gateway for LTCH20, TFTH20, MODBUS, BACnet, and third-party thermostats	GWX

Included	LCDI Power Cords	NEMA	SKU
☐	LCDI is not available over 20A for 115V units		

10.7 115V Heat pump + elec heat - Energy Star Compliant

AIO® VERTICAL STACK - 115V - 900W ELECTRIC HEAT - R32 - SUBMITTAL (AVK09N3H1)

Job	Reference	Construction
Location	Approval	Quote Number
Engineer	Date	Drawing Number
Submitted To	Submitted By:	P.O. Number:

General Features

- BLDC inverter compressor
- ECM fans
- R32 Refrigerant
- Field configured 900W electric heat supplement
- Auto restart
- Intelligent defrost
- No outdoor unit
- Condensate disbursement systems
- Onboard touch controller
- Washable filter
- Compact, slim design
- 4 selectable fan speeds + Auto
- 10-Year limited warranty (after certification)
- Made in Italy

The installing contractor must contact INNOVA Customer Technical Support prior to installation to schedule an installation training overview.
This may be conducted in person or remotely (online). It is the official installation training and may include videos, best practices, and system requirements.
Performing installations without training may result in installation errors, performance issues, and possible warranty limitations.

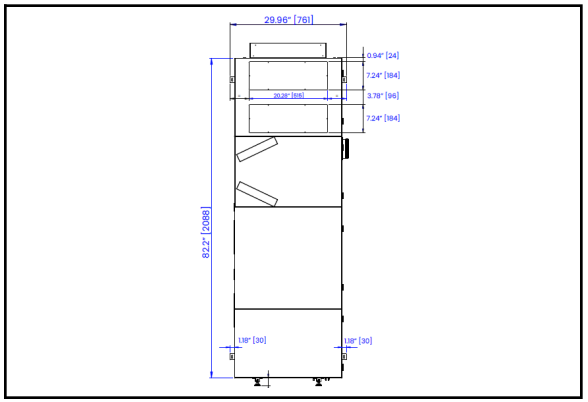

Performance Specifications			
Cooling	Min-Max	BTU/H	3,600 - 14,400
	Rated capacity (95°F [35°C])		7,500
	Efficiency	EER2	11.6
Heating	Min-Max	BTU/H	3,900 - 13,800
	Rated capacity (47°F [8.3°C])		8,200
	Rated capacity (5°F [-15°C])		6,400
	Efficiency	COP	3.66
Sound	Indoor: Low-High at 1 m distance	db(A)	40 - 50
	Indoor: Low-High at 3 m distance		32 - 42
	Outdoor sound range		28 - 55
Moisture removal		Pts/h	1.8
		L/hr	0.9
Airflow	Indoor	CFM	226 - 400
		m^3/min	384 - 680
	Outdoor	CFM	385 - 638
		m^3/min	654 - 1084

Electric Specifications	
Power Supply (V/Ph/Hz)	115V/1Ph/60Hz
Voltage Range	103-127
Running Amps Cooling	15.9
Running Amps Heating	15.9
MCA	31
Maximum Overcurrent Protection (A)	40
Max Power Input (amps) Cooling	19.0
Max Power Input (amps) Heating	27.2

Included	Wall Controllers + Gateways	
☐	Wireless Remote	WRCH20
☐	Basic Touch Controller	LTCH20
☐	Recessed Touch Controller	RTCH20
☐	Advanced TFT Controller with 7-Day program	TFTH20
☐	Wireless (AA Battery) Infrared Controller with 7-Day program	WIPT20
☐	Third Party Gateway	TPG015
☐	WiFi App	WIFI30
☐	E-Paper EOS Controller	EEOS12
☐	Simple EOS Controller	SEOS12
☐	Integration gateway for LTCH20, TFTH20 and MODBUS	GWN
☐	Integration gateway for LTCH20, TFTH20, MODBUS, BACnet, and third-party thermostats	GWX

Included	LCDI Power Cords	NEMA	SKU
☐	LCDI is not available over 20A for 115V units		

10.8 230V Heat pump only - Energy Star Compliant

AIO® VERTICAL STACK - 230V -NO ELECTRIC HEAT - R32 - SUBMITTAL (AVP09N3H2)

Job	Reference	Construction
Location	Approval	Quote Number
Engineer	Date	Drawing Number
Submitted To	Submitted By:	P.O. Number:

General Features

- BLDC inverter compressor
- ECM fans
- R32 Refrigerant
- Auto restart
- Intelligent defrost
- No outdoor unit
- Condensate disbursement systems
- Onboard touch controller
- Washable filter
- Compact, slim design
- 4 selectable fan speeds + Auto
- 10-Year limited warranty (after certification)
- Made in Italy

The installing contractor must contact INNOVA Customer Technical Support prior to installation to schedule an installation training overview.
This may be conducted in person or remotely (online). It is the official installation training and may include videos, best practices, and system requirements.
Performing installations without training may result in installation errors, performance issues, and possible warranty limitations.

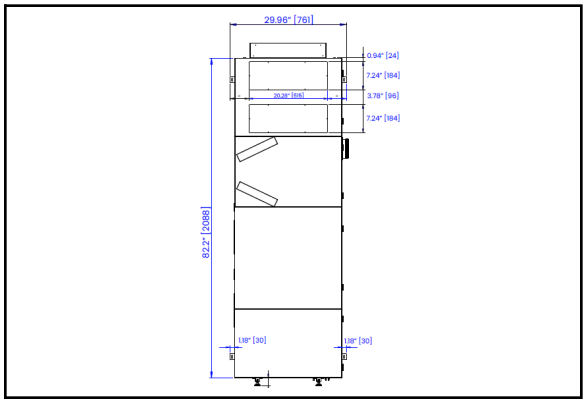

Performance Specifications			
Cooling	Min-Max	BTU/H	3,600 - 14,400
	Rated capacity (95°F [35°C])		7,500
	Efficiency	EER2	11.6
Heating	Min-Max	BTU/H	3,900 - 13,800
	Rated capacity (47°F [8.3°C])		8,200
	Rated capacity (5°F [-15°C])		6,400
	Efficiency	COP	3.66
Sound	Indoor: Low-High at 1 m distance	db(A)	40 - 50
	Indoor: Low-High at 3 m distance		32 - 42
	Outdoor sound range		28 - 55
Moisture removal		Pts/h	1.8
		L/hr	0.9
Airflow	Indoor	CFM	226 - 400
		m^3/hr	384 - 680
	Outdoor	CFM	385 - 638
		m^3/hr	654 - 1084

Electric Specifications	
Power Supply (V/Ph/Hz)	230V/1Ph/60Hz
Voltage Range	180 - 253
Running Amps Cooling	7.9
Running Amps Heating	7.9
MCA	11
Maximum Overcurrent Protection (A)	15
Max Power Input (amps) Cooling	9.5
Max Power Input (amps) Heating	9.5

Included	Wall Controllers + Gateways	
☐	Wireless Remote	WRCH20
☐	Basic Touch Controller	LTCH20
☐	Recessed Touch Controller	RTCH20
☐	Advanced TFT Controller with 7-Day program	TFTH20
☐	Wireless (AA Battery) Infrared Controller with 7-Day program	WIPT20
☐	Third Party Gateway	TPG015
☐	WiFi App	WIFI30
☐	E-Paper EOS Controller	EEOS12
☐	Simple EOS Controller	SEOS12
☐	Integration gateway for LTCH20, TFTH20 and MODBUS	GWN
☐	Integration gateway for LTCH20, TFTH20, MODBUS, BACnet, and third-party thermostats	GWX

Included	LCDI Power Cords	NEMA	SKU
☐	89 in. (2260.6 mm)	6-15P	L259A

10.9 230V Heat pump + 1,800W elec heat - Energy Star Compliant

AIO® VERTICAL STACK - 230V - 1,800W ELECTRIC HEAT STRIP - R32 -SUBMITTAL (AVK09N3H2)

Job	Reference	Construction
Location	Approval	Quote Number
Engineer	Date	Drawing Number
Submitted To	Submitted By:	P.O. Number:

General Features

- BLDC inverter compressor
- ECM fans
- R32 Refrigerant
- Field configured 1,800W electric heat supplement
- Auto restart
- Intelligent defrost
- No outdoor unit
- Condensate disbursement systems
- Onboard touch controller
- Washable filter
- Compact, slim design
- 4 selectable fan speeds + Auto
- 10-Year limited warranty (after certification)
- Made in Italy

The installing contractor must contact INNOVA Customer Technical Support prior to installation to schedule an installation training overview.
This may be conducted in person or remotely (online). It is the official installation training and may include videos, best practices, and system requirements.
Performing installations without training may result in installation errors, performance issues, and possible warranty limitations.

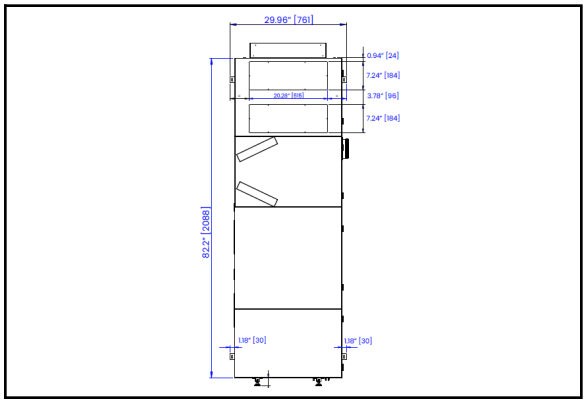

Performance Specifications			
Cooling	Min-Max	BTU/H	3,600 - 14,400
	Rated capacity (95°F [35°C])		7,500
	Efficiency	EER2	11.6
Heating	Min-Max	BTU/H	3,900 - 13,800
	Rated capacity (47°F [8.3°C])		8,200
	Rated capacity (5°F [-15°C])		6,400
	Efficiency	COP	3.66
Sound	Indoor: Low-High at 1 m distance	db(A)	40 - 50
	Indoor: Low-High at 3 m distance		32 - 42
	Outdoor sound range		28 - 55
Moisture removal		Pts/h	1.8
		L/hr	0.9
Airflow	Indoor	CFM	226 - 400
		m^3/hr	384 - 680
	Outdoor	CFM	385 - 638
		m^3/hr	654 - 1084

Electric Specifications	
Power Supply (V/Ph/Hz)	230V/1Ph/60Hz
Voltage Range	180 - 253
Running Amps Cooling	7.9
Running Amps Heating	7.9
MCA	19
Maximum Overcurrent Protection (A)	20
Max Power Input (amps) Cooling	9.5
Max Power Input (amps) Heating	17.3

Included	Wall Controllers + Gateways	
☐	Wireless Remote	WRCH20
☐	Basic Touch Controller	LTCH20
☐	Recessed Touch Controller	RTCH20
☐	Advanced TFT Controller with 7-Day program	TFTH20
☐	Wireless (AA Battery) Infrared Controller with 7-Day program	WIPT20
☐	Third Party Gateway	TPG015
☐	WiFi App	WIFI30
☐	E-Paper EOS Controller	EEOS12
☐	Simple EOS Controller	SEOS12
☐	Integration gateway for LTCH20, TFTH20 and MODBUS	GWN
☐	Integration gateway for LTCH20, TFTH20, MODBUS, BACnet, and third-party thermostats	GWX

Included	LCDI Power Cords	NEMA	SKU
☐	89 in. (2260.6 mm)	6-20P	L229A

10.10 230V Heat pump + 2,700W elec heat - Energy Star Compliant

AIO® VERTICAL STACK - 230V - 2,700W ELECTRIC HEAT STRIP - R32 -SUBMITTAL (AVL09N3H2)

Job	Reference	Construction
Location	Approval	Quote Number
Engineer	Date	Drawing Number
Submitted To	Submitted By:	P.O. Number:

General Features

- BLDC inverter compressor
- ECM fans
- R32 Refrigerant
- Field configured 2,700W electric heat supplement
- Auto restart
- Intelligent defrost
- No outdoor unit
- Condensate disbursement systems
- Onboard touch controller
- Washable filter
- Compact, slim design
- 4 selectable fan speeds + Auto
- 10-Year limited warranty (after certification)
- Made in Italy

The installing contractor must contact INNOVA Customer Technical Support prior to installation to schedule an installation training overview.
This may be conducted in person or remotely (online). It is the official installation training and may include videos, best practices, and system requirements.
Performing installations without training may result in installation errors, performance issues, and possible warranty limitations.

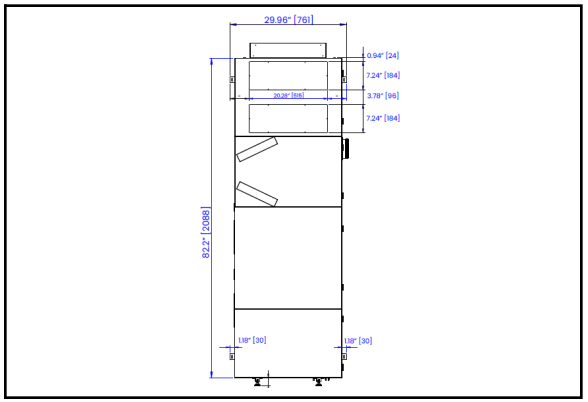

Performance Specifications			
Cooling	Min-Max	BTU/H	3,600 - 14,400
	Rated capacity (95°F [35°C])		7,500
	Efficiency	EER2	11.6
Heating	Min-Max	BTU/H	3,900 - 13,800
	Rated capacity (47°F [8.3°C])		8,200
	Rated capacity (5°F [-15°C])		6,400
	Efficiency	COP	3.66
Sound	Indoor: Low-High at 1 m distance	db(A)	40 - 50
	Indoor: Low-High at 3 m distance		32 - 42
	Outdoor sound range		28 - 55
Moisture removal		Pts/h	1.8
		L/hr	0.9
Airflow	Indoor	CFM	226 - 400
		m^3/hr	384 - 680
	Outdoor	CFM	385 - 638
		m^3/hr	654 - 1084

Electric Specifications	
Power Supply (V/Ph/Hz)	230V/1Ph/60Hz
Voltage Range	180 - 253
Running Amps Cooling	7.9
Running Amps Heating	7.9
MCA	24
Maximum Overcurrent Protection (A)	25
Max Power Input (amps) Cooling	9.5
Max Power Input (amps) Heating	21.2

Included	Wall Controllers + Gateways	
☐	Wireless Remote	WRCH20
☐	Basic Touch Controller	LTCH20
☐	Recessed Touch Controller	RTCH20
☐	Advanced TFT Controller with 7-Day program	TFTH20
☐	Wireless (AA Battery) Infrared Controller with 7-Day program	WIPT20
☐	Third Party Gateway	TPG015
☐	WiFi App	WIFI30
☐	E-Paper EOS Controller	EEOS12
☐	Simple EOS Controller	SEOS12
☐	Integration gateway for LTCH20, TFTH20 and MODBUS	GWN
☐	Integration gateway for LTCH20, TFTH20, MODBUS, BACnet, and third-party thermostats	GWX

Included	LCDI Power Cords	NEMA	SKU
☐			

With over 20 years of experience in the climate comfort sector, we have a clear goal: growth through innovation. Our team is laser-focused on the conception, development, and production of innovative heating, ventilation, and air conditioning solutions. This mission has developed through bringing together technical skills, creativity, technology, design, Italian passion, and a global vision to achieve the best energy efficiency and performance.

innova.co | **USA:** 216-710-1000 **Canada:** 416-739-1000

MADE IN ITALY

© 2026 INNOVA. All rights reserved.

Revised October 5, 2026

AIO® Vertical Stack without ERV (Gen 4)
Product Data Sheet