AIO® Wall Mounted (Gen 2)

Installation Guide



innova

AHRI CERTIFIED® www.ahridirectory.org
Unitary Small HP
AHRI Standard 210/240

Intertek

ENERGY STAR

CONTACT INFO

VIP Customer/Technical Support
Email: vip@innova.co
Phone: (212) 204-2700

AIO® is a registered trademark of INNOVA.
Copyright © 2026 INNOVA. All rights reserved.

DISCLAIMER

IMPORTANT - TRAINING IS REQUIRED PRIOR TO PERFORMING INSTALLATION.

While this guide outlines the general installation requirements for the unit, it does not replace required installer training. Before commencing installation, the project manager must contact the INNOVA VIP Department at (212) 204-2700 to coordinate training for the installer.

Failure to ensure that installation is performed by INNOVA-trained personnel may result in improper operation or equipment damage, and may void the warranty.

Training may be conducted in person or remotely (online).

This overview serves as the official installation training and may include overview videos, best practices, and system requirements

This documentation is intended for informational use only and should not be construed as a binding representation or contract. This documentation is provided “as is” without warranty of any kind, either express or implied. INNOVA and its affiliates disclaim all liability arising from the use or misuse of this documentation.

Illustrations may not be to scale, and all information and dimensions stated herein are subject to change at any time at the sole discretion of INNOVA. Benefits described herein apply only to the extent that the product is installed correctly in the correct application and used for its intended purpose.

INNOVA is constantly innovating and improving its products and reserves the right to modify product design and specifications without notice, and without incurring any obligations.

CERTIFICATIONS & LISTINGS

The AHRI Certified® mark indicates INNOVA's participation in the AHRI Certification program. For verification of individual certified products, go to www.ahridirectory.org.

ETL Listed. Control Number: 5032306. Conforms to: UL 60335-2-40:2022 Ed.4 | CSA C22.2#60335-2-40:2022 Ed.4 | UL 60335-1:2016 Ed.6 | CSA C22.2#60335-1:2016 Ed.2

MODEL NUMBER NOMENCLATURE

The code identifies the family, model, version, size, voltage, accessories, refrigerant type, and ERV option. See the diagram below for details.

Figure 1. AIO® nomenclature

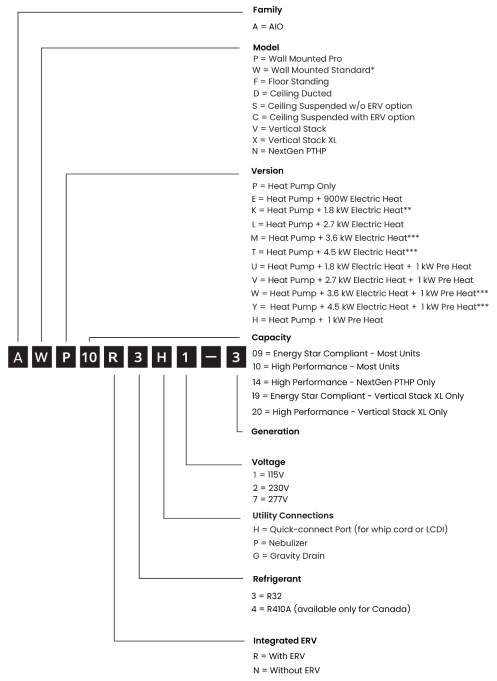

* 8” Vents : Just generation (e.g. = 3)

6” Vents : Generation + SP (e.g. = 3SP)

** Field convertible to 900W

*** AIO® Vertical Stack XL **Only**

CONTENTS

1. READING THIS DOCUMENTATION..... 4

1.1 Documentation-specific language..... 4

1.2 Icons and symbols..... 4

2. SAFETY GUIDELINES - READ BEFORE INSTALLING..... 5

2.1 Fire/explosion hazards..... 5

2.2 Refrigerant hazards..... 5

2.3 Hot surface hazards..... 6

2.4 Electrical hazards..... 6

2.5 Moving parts hazards..... 7

2.6 Handling and mechanical hazards..... 7

2.7 Installation environment hazard..... 7

3. AIO® WALL MOUNTED (GEN 2) OVERVIEW..... 8

3.1 Components and structure..... 8

3.2 Model Number Nomenclature..... 8

4. RECEIVING AND HANDLING THE UNIT..... 8

4.1 Shipping configuration..... 8

4.2 Packaging dimensions and weight..... 8

4.3 Unpacking the unit..... 9

4.4 Inspecting the unit..... 9

5. SITE PREPARATION..... 10

5.1 Pre-Installation Checklist..... 10

5.2 Clearances..... 10

5.3 Tools and materials needed..... 11

6. INSTALLING THE UNIT..... 11

6.1 Affixing the template to the wall..... 11

6.2 Preparing the vents..... 12

6.3 Affixing the Wall Bracket to the wall..... 12

6.4 Attaching exterior louvers..... 14

6.5 Preparing a condensate drain..... 15

6.6 Preparing the electrical connection..... 16

6.7 Mounting the unit on the Wall Bracket..... 17

6.8 Fastening the Anti-Lift Brackets..... 17

6.9 Checking for air leakage..... 17

6.10 Connecting the unit to the power supply..... 18

6.11 Connecting the condensate drain..... 18

6.12 Condensate drain maintenance..... 19

7. TESTING THE UNIT..... 19

8. CONFIGURING THE UNIT..... 20

8.1 Configuring the unit for a high wall application.. 20

8.2 Connecting a Dry Contact..... 20

8.3 Configuring heat strip wattage..... 22

9. SELF-CERTIFYING THE INSTALLATION..... 23

9.1 Post-Installation Certification Checklist..... 23

10. FINAL STEPS AFTER INSTALLATION..... 23

11. WIRING DIAGRAMS..... 24

11.1 AIO® Wall Mounted 115V Wiring Diagram..... 24

11.2 AIO® Wall Mounted 230V Wiring Diagram..... 24

11.3 AIO® Wall Mounted 230V with Heat Strip Wiring Diagram..... 24

12. WARRANTY..... 25

12.1 Basic Coverage..... 25

12.2 Optional Extended Coverage..... 25

12.3 Validation Requirements..... 25

1. READING THIS DOCUMENTATION

Some language and symbols in this documentation have specific meanings.

1.1 Documentation-specific language

Reference to the product
Any reference to "the unit" is meant to refer to the AIO® Wall Mounted (Gen 2) unit.

Unit orientation
All directions in this guide (left, right, top, and bottom) are given from the perspective of facing the unit.

Role definitions
This guide is primarily intended for installers. The roles of end users and service technicians are also defined here for reference.

- **User:** a non-expert who can safely operate the unit and perform basic diagnostics and maintenance.
- **Installer:** a trained and certified HVAC installation technician responsible for the correct installation of the unit as indicated in the installation guide and in accordance with all local and national codes.
- **Service technician:** a trained and qualified HVAC service technician (including OSHA-required safety practices and industry best practices) as required by national and local codes.
- **Trained HVAC technicians:** a group term for both installation and service technicians.

1.2 Icons and symbols

Warnings and annotations are provided throughout this guide. It is essential to read each carefully and follow the instructions stated.

Warning panels
The warning panels represent the level and immediacy of risk. Each warning panel displays a background color and a signal word.

DANGER

The red panel with the **DANGER** signal word indicates a hazardous situation that, if not avoided, will result in imminent death or serious injury.

WARNING

The orange panel with the **WARNING** signal word indicates a potential hazard that, if not avoided, could result in death or serious injury.

CAUTION

The yellow panel with the **CAUTION** signal word indicates a hazardous situation that, if not avoided, could result in minor to moderate injury or property damage.

Warning pictograms
The warning pictograms represent the type of risk and are used in conjunction with any of the warning panels.

	The three vertical, S-shaped, parallel lines pictogram indicates information related to a hot surface or explosion hazard.
	The lightning-bolt pictogram indicates a warning related to electrical hazards.
	The three vertical, S-shaped, parallel lines pictogram indicates information related to a hot surfaces hazard.
	The hand injury pictogram indicates information related to a moving part and sharp surfaces hazard.
	The slippery surface pictogram indicates information related to a slipping hazard.
	The exclamation-mark pictogram indicates general hazards (environmental hazards, moving parts hazards, lifting hazards, and other categories).

Annotation icons
Annotations are provided throughout this guide. It is essential to read each carefully and follow the instructions stated.



Indicates critical information for correct operation or installation.



Indicates supplemental information, tips, or useful background information.

2. SAFETY GUIDELINES - READ BEFORE INSTALLING

This guide outlines the steps necessary to install the AIO® Wall Mounted (Gen 2) unit safely and securely. By following these instructions, the risk of damage to the equipment can be significantly reduced.

The installer is responsible for ensuring that the unit is installed safely and securely, in full compliance with all applicable local and national codes.

The precautions in this guide supplement, rather than replace, established safety practices. In case of conflict, always follow the more stringent requirement.

Only a trained HVAC installation technician may install this unit.

Read the entire installation guide before installing the unit. Follow all safety notices, warnings, and labels carefully. Failure to do so may result in property damage, serious injury, or death.

2.1 Fire/explosion hazards

⚠WARNING

- The unit shall be stored in a room without continuously operating ignition sources (for example, open flames, an operating gas appliance, or an operating electric heater).
- Do not use means to accelerate the defrosting process or to clean, other than those recommended by the manufacturer.
- In the event of abnormal conditions (such as a strange or burning smell, noise, or smoke), turn off the unit and disconnect it from its power source immediately. Report the issue immediately to your INNOVA representative or distributor.
- Servicing shall be performed only as recommended by the manufacturer.

2.2 Refrigerant hazards

⚠DANGER

- Flammable refrigerant is used. Only trained HVAC technicians are authorized to handle refrigerant charging, recovery, or disposal.
- Do not puncture the refrigerant copper tubing.
- Do not expose the refrigerant copper tubing to heat sources, sparks, or open flames.
- Do not use open flame or high-heat sources for leak detection (for example, halogen lamps); fire or explosion can result. Only use approved electronic detectors when checking for refrigerant leaks.
- Refrigerant under pressure; handle with appropriate protective equipment (PPE).

⚠WARNING

- Do not leave refrigerant cylinders in confined spaces; always store and use them in well-ventilated areas. Keep ventilation openings clear of obstruction.
- Do not charge, replace, or mix the R32 refrigerant with any other refrigerant type. Using other refrigerant types may result in equipment damage and safety risks.
- An unventilated area where a unit using flammable refrigerants is installed shall be constructed so that, in the event of a refrigerant leak, gas will not accumulate to a level that creates a fire or explosion hazard. Be aware that leaking refrigerants may be odorless.
- Never store or transport refrigerant cylinders in temperatures above 122°F (50°C).

- During storage, protect cylinders and the unit from mechanical damage, tipping, or corrosion.

⚠CAUTION

- Leak testing must be completed after installation is complete.
- The unit uses flammable refrigerant (R32). If the unit does not cool or heat, it may indicate a refrigerant leak. If a leak is detected, do not touch the unit. Ventilate the area and immediately consult the building manager or unit manufacturer. Refrigerant may cause cold burns.
- When handling the unit, verify that no other substance (including air) other than the contained R32 refrigerant enters the refrigerant circuit.
- Do not release refrigerant into the atmosphere; follow environmental regulations. In the US, refrigerant handling must comply with the EPA Clean Air Act Section 608 (certified personnel, recovery, reclaim, and recycling requirements).
- Follow all local environmental regulations for refrigerant handling and disposal.

2.3 Hot surface hazards

⚠DANGER

- Only trained HVAC technicians are permitted to access internal components while the system is hot.
- Hot parts. Do not operate the unit with the cover removed. Certain components (compressor, coils, discharge piping, and other parts) may reach high temperatures during operation.

⚠CAUTION

- Allow sufficient time for surfaces to cool before handling or servicing. Contact with hot parts can cause burns or damage to equipment.
- Keep flammable materials away from hot surfaces at all times.
- Use appropriate PPE (gloves, protective clothing) when touching or working near hot components.

2.4 Electrical hazards

⚠DANGER

- Only trained HVAC technicians are authorized to install or service electrical components.
- Disconnect all electric power, including remote disconnects, before installation, maintenance, or servicing. Verify that power to the entire system is down, including any peripherals, third-party devices, power backup systems, and other devices operating in the unit network..

⚠WARNING

- All connections must be prepared only by a certified electrician.
- Wiring and grounding must comply with the National Electrical Code (NEC) and all applicable local codes and regulations. Improper wiring or loose connections may cause overheating, fire, or electric shock.
- Connect only to a dedicated branch circuit of proper ampacity, protected by a correctly

sized overcurrent device (per unit nameplate and wiring diagram).

⚠CAUTION

- Follow OSHA-compliant Lockout/Tagout (LOTO) procedures.
- Use only standard circuit breakers and fuses that match the unit's rating.
- Do not use an extension cord or adapter plug, or connect multiple devices to a single outlet, as this may cause a fire or electric shock.
- Do not modify plugs or remove the grounding pin; always connect to a grounded 3-prong power supply.
- Do not bundle, pull, damage, or modify the power cord. Do not place heavy objects on it or heat sources on or near it, as this may cause a fire or electric shock.
- Do not operate the unit with damaged electrical cords or plugs. If the power cord is damaged, it must be replaced by the manufacturer or licensed service personnel.
- Do not connect the ground wire to gas pipes, lightning rods, or telephone ground.
- Ensure electrical panels are closed and secured before energizing equipment.
- In the event of a blackout or thunderstorm, turn the unit off and disconnect it from the power source immediately.
- Verify that the electrical supply voltage, electrical service, and power quality meet the equipment requirements before operating the unit. Do not operate the equipment under improper voltage conditions or with excessive Total Harmonic Distortion (THD). Damage or premature failure of the quoted equipment resulting from improper voltage conditions, inadequate electrical service, or operating the equipment with excessive THD (Total Harmonic Distortion) levels will void the Manufacturer's warranty.

2.5 Moving parts hazards

⚠DANGER

- Moving parts. Do not operate the unit with the cover removed.
- Ensure power is disconnected and components have come to a complete stop before accessing the interior. Internal fans, motors, and other moving components may start automatically when power is supplied.

⚠WARNING

- Keep hands, hair, tools, and loose clothing away from fans and moving components. Contact with moving parts can cause serious injury.
- Do not remove, bypass, or disable protective covers, guards, or safety interlocks..

⚠CAUTION

- Only trained HVAC technicians are authorized to service the unit with the panels removed.
- Reinstall all panels before operation and keep hands away from the fan area to prevent injury.

2.6 Handling and mechanical hazards

⚠CAUTION

- Heavy load. Two or more people are required to lift and mount the unit; respect safe lift limits to prevent injury.
- Protect control panel surfaces from being pressed with tools or sharp objects; use fingers only to prevent damage.

⚠CAUTION

- Edges inside the unit may be sharp - wear hand protection when handling sheet-metal parts to prevent cuts.

2.7 Installation environment hazard

⚠CAUTION

- Do not install above an elevation of 8,858 ft (2,700 m) unless specifically approved by the manufacturer — reduced air density may impair safe operation.
- Indoor installation only. Do not install outdoors or in locations exposed to rain, snow, or direct weather.
- When working at heights, follow all applicable fall protection regulations and guidelines. Use guardrails, harnesses, and barricade the area below to protect against falling objects.
- Verify the supporting structure can carry the full unit weight and operating loads, including vibration and dynamic loads.
- Install using proper anchors, fasteners, and torque.
- Keep the unit upright at all times; never lift it by its covers, panels, or refrigerant copper tubing.
- Protect the unit from impact, vibration, tipping, dust, and corrosive atmospheres during installation and operation.
- Do not install or store the unit in rooms with continuously operating ignition sources (for example, open flames, gas appliances, electric heaters).
- Maintain required service clearances and ensure ventilation openings remain

⚠CAUTION

unobstructed. Obstruction can cause malfunction or overheating.

- Dispose of all packaging materials safely to prevent suffocation, tripping hazards, or fire hazards.
- Follow all manufacturer instructions and applicable local building codes.

⚠WARNING

- Improper installation environments can result in fire, explosion, refrigerant leakage, equipment damage, or personal injury.
- Do not operate the unit in or near an environment under construction or renovation. Dust and debris can enter the unit, causing malfunctions and reduced performance..

3. AIO® WALL MOUNTED (GEN 2) OVERVIEW

3.1 Components and structure

Figure 2. Components

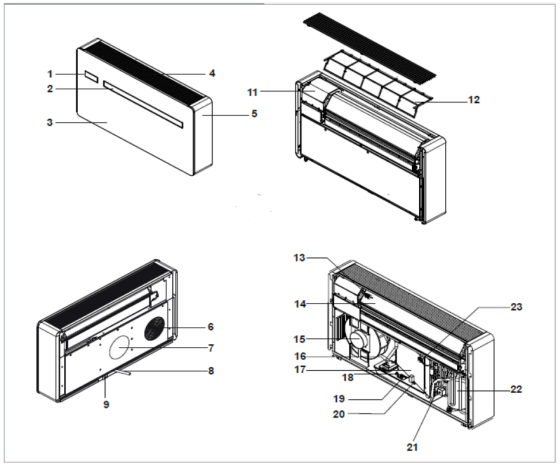

1	Onboard Touch Controller	**13**	Room Air Sensor
2	Air Outlet Deflector	**14**	Indoor Coil
3	Front Cover Panel	**15**	Outdoor Fan
4	Inlet Grille	**16**	Disbursement Pump
5	Decorative Side Panel	**17**	Outdoor Coil
6	Outdoor Air Intake	**18**	Maximum Level Float
7	Outdoor Air Outlet	**19**	Level Float
8	Rubber Drain Hose	**20**	Condensation Drain Valve
9	Anti-Lift Bracket	**21**	Four-Way Valve
11	Terminal Block	**22**	Compressor
12	Air Filter	**23**	Outdoor Air Sensor

3.2 Model Number Nomenclature

The code identifies the family, model, version, size, voltage, accessories, refrigerant type, and ERV option. See the diagram below for details.

Figure 3. AIO® nomenclature

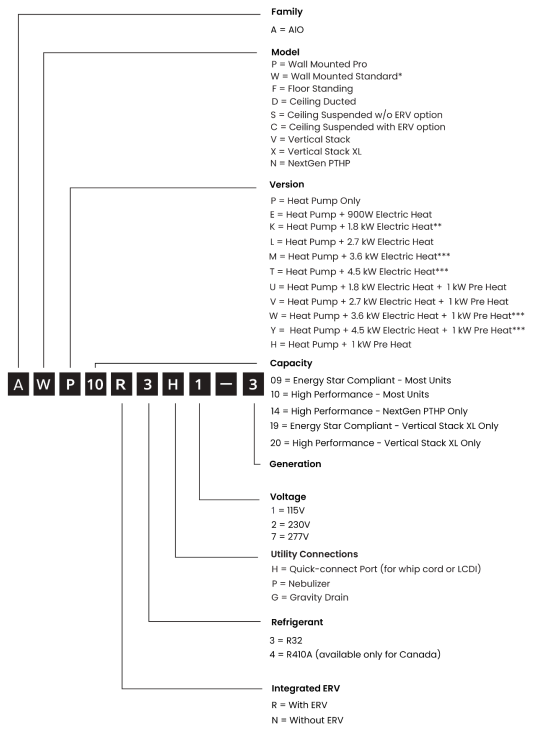

* 8" Vents : Just generation (e.g. = 3)

6" Vents : Generation + SP (e.g. = 3SP)

** Field convertible to 900W

*** AIO® Vertical Stack XL **Only**

4. RECEIVING AND HANDLING THE UNIT

The following contains information about preparing for the unit's installation.

4.1 Shipping configuration

The unit and mounting bracket are shipped in a single carton. Other accessories are shipped separately.

4.2 Packaging dimensions and weight

The following provides the dimensions of the packed unit and its gross weight.

Figure 4. Packaging dimensions and weight

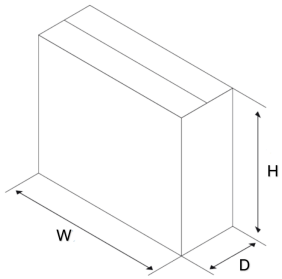

- **Width (W):** 43.30 in (1099.8 mm)
- **Height (H):** 26.38 in (670.1 mm)
- **Depth (D):** 10.04 in (255 mm)
- **Weight:** 99.21 lb (45 kg)

4.3 Unpacking the unit

⚠CAUTION

- **The unit must remain upright at all times.** Tipping the unit — whether on its side, back, or at an angle — can damage the compressor welds and cause refrigerant leaks.
- The package must be transported upright. If it was not, notify your INNOVA representative or contractor immediately.



Do not place the unit in any position other than upright under any circumstances.

Follow this procedure when receiving the shipment:

1. **Inspect the packaging.**
   - Upon delivery, check all cartons for visible damage.
   - If there is damage, take clear photographs of the damage before opening the carton.
   - If the unit was delivered on its side, note this on the delivery receipt and notify your INNOVA representative or contractor.



If the unit was delivered on its side, wait at least 72 hours before operating to allow the refrigerant to settle.

2. **Remove the unit from the carton.**
   - Carefully remove the unit from the carton while keeping it upright.

⚠WARNING

- Always use two people to lift and install the unit.
- The unit is heavier on the right side (compressor side) and may be unbalanced when lifted.
- **Failure to use proper lifting techniques can result in back injury or other physical harm.**

   - Check the interior of the carton for signs of refrigerant leakage using an electronic leak detector compatible with R-32.
   - If refrigerant leakage is detected inside the carton:
     - Do **NOT** install the unit.
     - Report the issue immediately to your INNOVA representative or distributor.

3. **Perform basic functional testing (if necessary).** If the carton was damaged but the unit appears physically intact, after unpacking, test the unit in both heating and cooling modes. Report any irregularities or operational issues immediately to your INNOVA representative or distributor.
4. **Verify package contents.** Verify the contents of the carton using the components list to ensure that all components are present. If any items are missing, contact your INNOVA representative or distributor immediately.

4.4 Inspecting the unit

After unpacking the unit, thoroughly inspect it for damage prior to installation:

1. Access the unit's nameplate (located on the right side of the unit and on the black electric cover), and ensure that it matches the order and shipping documents.
2. Inspect the unit and all accessories for any damage that may have occurred during shipping.

   If the unit appears damaged:

   a. Remove the outer covers to inspect for underlying damage.
   b. Photograph all damage and all sides of the unit to support a damage claim.
   c. Clearly document the damage on the freight bill.
   d. Notify your INNOVA representative or distributor.



To remain eligible for a claim, all damage must be reported within two weeks of delivery.

5. SITE PREPARATION

5.1 Pre-Installation Checklist

Before installing an AIO® unit, review the following checklist and ensure that all of the listed items are true.

- ☐ Make sure you have approved louvers for external venting. Use of any grille or louver assembly other than those approved may cause the unit to overheat and result in a fire. It can also lead to water damage and/or performance issues and will void the warranty. See Approved Louvers for louver specifications.
- ☐ Make sure to download and print the correct template for the louver you are using. Some louver assemblies require holes drilled in slightly different places to accommodate the design. You can access templates by visiting innova.co/templates. If you are not 100% sure that you have the correct template, discuss it with your distributor or INNOVA.
- ☐ Ensure that the installation location provides sufficient clearance around the unit. For specific clearance requirements, see Clearances.
- ☐ Ensure that the installation location is at least 41" (1041.4 mm) away from devices that receive or transmit electromagnetic radiation.
- ☐ Ensure that the wall at the installation location can support the weight of the AIO® Wall Mounted unit.
  The wall must meet one of the following conditions:
  - Contain internal studs, allowing at least two of the bracket screws to be anchored into studs.
  - Be constructed of a solid load-bearing material (such as concrete or masonry) capable of supporting the full weight of the unit with appropriate anchors.

To check for stud locations:

Position the mounting template on the wall and check whether studs are located behind the holes marked **A**, where the bracket will be attached.

- ☐ Check if there is a drain hole in the wall aligned with the drain marking on the template (marked **D**). If there is not, ensure that it is safe to drill a drain hole through the wall in the correct location.
- ☐ Ensure that one of the following electrical setups is in place at the installation location:
  - A grounded power outlet with the correct rating, located within 24" (609.6 mm) of the unit.
  - The wall is prepared for in-wall hardwiring, with access aligned to the electrical connection area indicated on the installation template.
- ☐ Ensure that there are no obstacles on the exterior of the building that could block airflow from the louvers. We require maintaining **at least 36" (914.4 mm) of unobstructed clearance** in front of the louvers for proper airflow.
- ☐ Ensure that there are no curtains or furniture that will block the return or supply air grilles on the AIO® Wall Mounted unit.

⚠CAUTION

- Where practical, avoid installing the unit in direct sunlight. Solar heating may cause the room-air temperature sensor to provide inaccurate readings, resulting in improper unit operation.

5.2 Clearances

The AIO® Wall Mounted unit's clearance requirements depend on how the unit is mounted. Carefully read the following criteria to determine the required clearances.

- **Top Clearance**
  There must be a minimum of 3½" (88.9 mm) clearance between the unit and any surface above, including the ceiling or a shelf. This is needed for the return airflow. However, to ease cleaning the filter and servicing the unit, 8" (203.2 mm) of clearance is recommended.
- **Bottom Clearance**
  There must be a minimum of 3" (76.2 mm) clearance between the unit and the floor to:
  - Prevent any vibration noise from the unit.
  - Allow the floor under the unit to be cleaned.
  - Allow for proper drain maintenance.
  - Avoid compressing the condensate line.
- **Side Clearances**
  The AIO® Wall Mounted unit must not come into contact with any surfaces on either side, as it produces slight vibrations during operation. To prevent vibration-related noise, a minimum clearance of 1" (25.4 mm) is required on each side. However, for ease of installation and removal, a clearance of 2½" (63.5 mm) on either side is recommended.
- **Front Clearance**
  A minimum of 30" (762 mm) of unobstructed space is required in front of the AIO® unit to ensure proper airflow. Because the supply air vent is located on the front panel, any obstruction can inhibit performance and reduce efficiency. Be sure to keep the area clear of curtains, furniture, plants, or any other objects that could block the airflow.
- **Rear Clearance**
  The rear of the unit must be installed flush against the wall, with no gaps between the unit and the wall surface. Any gap can allow unconditioned air to enter the unit, potentially causing short cycling, reduced efficiency, and improper humidity control.
- **Exterior Clearance**
  There must be a minimum of 36" (914.4 mm) clearance in front of the exterior louvers. This is to ensure proper airflow from the louvers.

Figure 5. Clearances

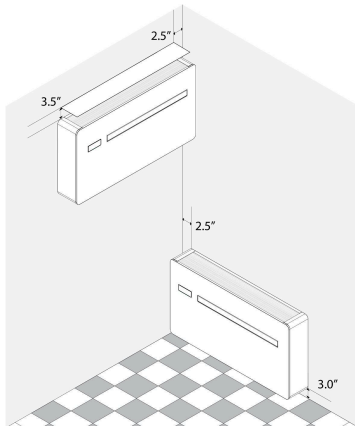

5.3 Tools and materials needed

Ensure that you have the following tools and supplies on hand before you start the installation:

- Power drill (and hammer drill, if necessary) with assorted bits, paddle bits, and hole saws.
- Impact driver with assorted driver bits.
- At least four 1/4" (6.4 mm) load-bearing wall anchors, each capable of supporting at least 50 lbs (22.7 kg) and removable without damaging the wall.
- Level (preferably a digital level).
- Silicon sealant with applicator (for sealing around external wall penetrations).
- UL-compliant air sealing tape and/or HVAC mastic or sealant (for airtight sealing of ducts and penetrations, as required by code).
- Wiring tools.
- Insulated foam board panels (for PTAC replacement with the AIO® Wall Mounted Pro unit).
- PVC piping (required for external drain installations, long enough to extend beyond the exterior wall at the installation site).
- Mirror (for visual inspection behind the unit).
- Printed template for mounting the bracket

Materials provided

The AIO® Wall Mounted unit includes the following components:

- AIO® unit
- Two anti-lift brackets (pre-installed on the unit) to help maintain unit level and prevent unwanted movement (see Fastening the Anti-Lift Brackets).
- Wall-mounting bracket to secure the unit to the wall (see Affixing the Wall Bracket to the Wall).

6. INSTALLING THE UNIT

To install the AIO® Wall Mounted unit:

1. Affix the template to the wall.
2. Prepare the vents.
3. Affix the wall bracket to the wall.
4. Attach the exterior louvers.
5. Prepare a condensate drain.
6. Prepare the electrical connection.
7. Check for air leaks.
8. Mount the AIO® unit on the wall bracket.
9. Fasten the Anti-Lift Bracket.
10. Connect the unit to the condensate drain.
11. Connect the unit to the power source.
12. Configure the AIO® Wall Mounted unit.
13. Test the unit.
14. Certify the installation.

6.1 Affixing the template to the wall

Before beginning the installation, affix the appropriate template to the wall to mark the correct placement for the wall bracket and vent holes.

Figure 6. Affixing the template to the wall

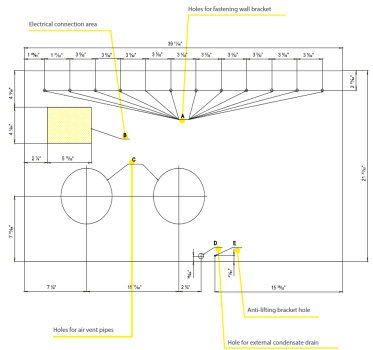

To affix the template:

1. **Ensure that you have downloaded and printed the correct template.**
   a. Templates are available at innova.co/templates
   b. Some louver assemblies require holes to be drilled in different locations.
   c. If you are unsure as to whether or not you have the correct template, contact your distributor or INNOVA.
2. **Tape the template to the wall.**
   a. Position the template in the exact location you want to install the unit.
   b. Use a level to ensure the template has a 1.25-2% slope down towards the right.
      - A digital level is recommended for greater accuracy.
      - If using a spirit level, confirm the bubble is slightly off-center to the left. Use a ruler to verify that the slope does not exceed ½" (12.7 mm).
   c. Use painter's tape to affix the template to the wall.



The unit must be level to operate properly. An uneven installation may cause water leakage, especially in humid conditions.

6.2 Preparing the vents

To prepare the vents:

1. **Make vent holes.**
2. **Install vent sleeves.**

Drilling Vent Holes

⚠WARNING

Before drilling any vent holes, you must verify that there is no electrical wiring in the path of the boreholes. **Drilling into live electrical wiring can result in death, serious injury, and/or property damage.**

To drill the vent holes:

1. **Inspect the borehole path to ensure it does not intersect with any of the following:**
   - Live electrical wiring.
   - Load-bearing structural components.
   - Exterior architectural features that may be damaged or obstructed.
2. **Select the appropriate drilling equipment** based on the wall material.
3. **Choose the correct borehole diameter**—either **6" (152.4 mm)**, **7" (177.8 mm)**, or **8" (203.2 mm)**, depending on the vent assembly used and the required airflow performance.
4. **Align the drill with the hole locations** as indicated on the template. Double-check positioning before drilling.
5. **Drill the boreholes with a slight downward pitch (2°-4°) toward the exterior.**
   This helps prevent water from entering the unit through the vent openings.



Although the downward pitch reduces the risk of water intrusion, INNOVA Inc. does not guarantee complete protection under extreme conditions, such as hurricanes.

Installing the vent sleeves

To install the veleves:

1. **Insert the vent sleeves into the boreholes.**
   Refer to the sleeve manufacturer's instructions for proper fit and alignment.
2. **Ensure the sleeve edges are flush with the interior wall surface or wall bracket.**
   Use silicone sealant to fill any visible gaps between the sleeve and the borehole.
3. **Seal all around the sleeves to eliminate any air gaps.**
   Apply a continuous bead of silicone around the entire perimeter—both inside and outside—to ensure a completely airtight seal.

⚠CAUTION

If the vent sleeves are not properly sealed, the unit's fan may draw insulation or exterior air into the system, potentially causing performance issues or damage.

6.3 Affixing the Wall Bracket to the wall

The wall bracket supports the full weight of the AIO® Wall Mounted unit. It must be securely installed to ensure both safety and proper operation.

⚠WARNING

- The AIO® Wall Mounted Unit must be securely mounted according to the instructions below.
- **Failure to do so may result in death, serious injury, or property damage.**

To install the wall bracket:

1. **Position the bracket:**
   a. Align the wall bracket with the mounting template. When the unit is installed, it should completely cover the bracket.
   b. Use the markings at the top right of the template to position the bracket correctly.
   c. Ensure that the holes on the wall bracket align precisely with the corresponding hole markings on the template.
2. **Select a Mounting Method:**
   There are two approved methods for securing the wall bracket:
   - Stud and Anchor Combination Method (Recommended)
   - Full Anchor Method

   To secure the bracket using the Stud and Anchor Combination Method:

   a. Attach one side:
   - Secure one side of the bracket to a wall stud.
   - Use a level to verify that the bracket is aligned with the slope of the template before continuing.

   b. Attach the other side:
   - Secure the second side of the bracket to another wall stud.
   - Confirm that the bracket remains properly aligned with the template.

   c. Secure the bracket to the wall
   Use a minimum of 6 screws to secure the wall bracket to the wall:
   - Two of the screws must go into the wall studs. These provide the primary structural support.
   - The two outermost holes on the wall bracket must be used. Screwing these down prevents the bracket from shifting.
   - The remaining four holes may be fastened to drywall using four ¼" (6.4 mm) load-bearing wall anchors that support at least 50 lbs (22.7 kg) and can be removed cleanly from the wall.

   d. Make sure the bracket is pulled tight against the wall with no visible gaps.

   To secure the bracket using the Full Anchor Method:

   a. Secure all six holes with load-bearing anchors.
   Use ¼" (6.4 mm) load-bearing wall anchors, rated for at least 50 lbs (22.7 kg) and easily removable from the wall.

   b. Make sure the bracket is pulled tight against the wall with no visible gaps.



Do not use butterfly anchors, as they cannot be removed cleanly and may damage the wall surface.



The two outermost holes on the wall bracket must always be used to prevent lateral shifting of the bracket.

3. **Verify level and tightness**



The wall surface itself must be flat and level to allow the unit to be flush with the wall. If the wall is uneven, the unit cannot be properly installed.

   a. Ensure the bracket is flush with the wall and does not flex or shift.
   b. Double-check that the bracket is aligned with the template.
4. **Seal the bracket.**
   a. Apply a continuous bead of silicone sealant around the outer edge of the bracket where it meets the wall.



Align the holes on the wall bracket with the markings for the wall bracket on the template.

The wall bracket markings are located on the top of the template.

To install the bracket:

1. **Attach one side:**
   - Secure one side of the bracket to a wall stud.
   - Use a level (preferably digital) to verify that the bracket is perfectly level before continuing.
2. **Attach the other side:**
   - Secure the second side of the bracket to another wall stud.
   - Confirm that the bracket remains level.
3. **Secure the bracket to the wall**
   - Use a minimum of 6 screws to secure the wall bracket to the wall.
     - Two of the screws must go into the wall studs. These provide the primary structural support.
     - The two outermost holes on the wall bracket must be used. Screwing these down prevents the bracket from shifting.
     - The remaining four holes may be fastened to drywall using four ¼" (6.4 mm) load-bearing wall anchors that support at least 50 lbs (22.7 kg) and can be removed cleanly from the wall.
   - Make sure the bracket is pulled tight against the wall with no visible gaps.
4. **Verify level and tightness**



The wall surface itself must be flat and level to allow the unit to be flush with the wall. If the wall is uneven, the unit cannot be properly installed.

   - Ensure the bracket is flush with the wall and does not flex or shift.
   - Double-check that the bracket is 100% level. Use a digital level if available. If using a spirit level, the bubble must be centered.
5. **Seal the bracket.**
   - Apply a continuous bead of silicone sealant around the outer edge of the bracket where it meets the wall.
   - Apply an additional bead of silicone along the inner edge where the bracket meets the wall.
   - At the bottom of the bracket, where it meets the wall, apply sealant to form a small lip that acts as a dam. This will prevent any water accumulation from entering the wall cavity or the vent sleeve.

⚠ WARNING

The AIO® Wall Mounted unit must be installed perfectly level and with an incline of ⅛" (3.2 mm) to the right. If the unit is not level, it may leak during operation. INNOVA will not certify any installation that is less than 89% level. Uncertified installations will void the warranty.

6.4 Attaching exterior louvers

This section explains which louvers are approved for use with the AIO® Wall Mounted Unit, what to consider when choosing a louver, and how to properly install the exterior louvers.

Approved Louvers

While many venting systems, including those using louvers or grilles, can be designed to work with the AIO® Wall Mounted Unit, only certain models have been tested and approved to ensure compatibility and performance.

The following louvers are approved for use with the AIO® Wall Mounted Unit:

- Sunvent
  - LLA/F 8W
  - LLA/C 8W
  - LLA/S 8W
- Thermaduct
  - RLA8

⚠ WARNING

Using any louver that does not follow the requirements in this section may cause fire, leaks, or unit failure, and will void the warranty.

Louver Selection Considerations

When selecting a louver for use with AIO® Series heat pumps, two critical factors must be considered to ensure proper system performance: **pressure drop** and **free area**.

- **Pressure Drop**

  Pressure drop is the resistance a louver or grille creates against airflow. Too much resistance can reduce airflow, causing heat buildup in the condenser chamber and potentially leading to compressor shutdown.

  The total combined pressure drop—for both intake and exhaust—must not exceed **0.25" WC** (62.3 Pa).

  If a louver exceeds this limit, it may still be used if the louver and plenum are enlarged to reduce restriction and bring the pressure drop within spec.



The supply and return sides do not need to have identical pressure drops, as long as their combined pressure drop does not exceed 0.25" WC (62.3 Pa).

- **Free Area**

  Free area is the open portion of a louver or grille that allows air to pass through, such as the gaps between slats or perforations. For proper airflow, each louver used with the AIO® Wall Mounted unit must provide **at least 0.21 square feet (0.02 m^2)** of free area.

  If using a more restrictive louver design, you can compensate by increasing the overall size of the louver and plenum to meet the required free area.

Always refer to the louver manufacturer's specifications to verify free area.

Installing the Exterior Louvers
To install the exterior louvers:

1. **Ensure that there are no obstacles in front of the location where the louvers will be located.**
   - Maintain a minimum of 40" (1016 mm) of free space in front of the louvers.
   - Ensure that there is a minimum of 84" (2133.6 mm) between the louvers and any other external exhaust sources, such as kitchen hoods, bathroom vents, dryer exhausts, etc. If local mechanical and building codes require a greater distance than 84" (2133.6 mm), the stricter standard should be followed.
2. **Install the louvers.**
   Follow the louver manufacturer's installation instructions.
3. **Seal the louver installation.**
   - Seal around the exterior components to prevent water penetration and damage.
   - Seal the louver sleeve tightly to the wallboard inside the room. Failure to adequately seal around the louver sleeves may result in the unit's fan pulling insulation into the unit and damaging the unit.

⚠CAUTION

Ensure that the vents and flashing are installed according to the manufacturer's specifications and are properly sealed to avoid any water damage.

6.5 Preparing a condensate drain

⚠CAUTION

- For installations in regions subject to **freezing winter conditions**, drain line piping must strictly adhere to the following pitch (slope) requirements to prevent ice blockages, water backup, and potential property damage:
  - **Direct Outdoor Drainage:** Any drain line routing directly to the outside environment **MUST maintain a minimum 30% pitch (approximately 3.6 in. per 12 in. / 300 mm per 1 meter)**. This steep slope ensures rapid, complete water evacuation before freezing can occur within the pipe.
  - **Internal Riser Drainage:** Drain lines routed into an internal building riser **MUST maintain a standard minimum pitch of 2% (approximately ¼ in. per 12 in. / 20 mm per 1 meter)**.
- Do not allow sags, traps, kinks, or low points where water can collect and freeze.
- The installer must verify proper condensate drainage during commissioning before operating the unit.
- Failure to follow these pitching guidelines in freezing environments will void the warranty for water damage caused by frozen or blocked drain lines.

This section provides information about condensate drain options and how to prepare a condensate drain for the AIO® Wall Mounted unit.

Condensate Drain Options
The AIO® Wall Mounted unit features an integrated condensate management system. This system includes a pump and a nebulizer nozzle that disperses condensate onto the heat exchanger coil while cooling. The heat from the coil evaporates the moisture, eliminating the need for a traditional drain under these conditions.

However, in heating mode—or during cooling in low ambient temperatures (below 64.5°F [18.1°C])—this evaporative system does not function effectively. In these scenarios, a dedicated condensate drain is required.

The unit includes a rubber drain hose at the bottom. This hose must connect to an appropriate drainage system, which can be one of the following:

- **In-the-wall drain (Recommended)**
  In this setup, the rubber hose connects to a drainpipe hidden inside the wall. The drainpipe carries the condensate to the building's wastewater system (sewer).



This is the preferred drain option. Use an internal wall drain whenever possible.

- **Direct exterior drain**
  In this configuration, the condensate hose discharges directly outside, either onto the ground or via an extended drainpipe or hose.
- **Safety Warnings:**
  - In winter, discharged water can freeze and cause slipping hazards.
  - In warmer months, standing water may encourage algae growth, which can also create slippery surfaces.
- **Installation requirements:**
  - The drainage is accomplished by gravity only. For this reason, the unit-supplied rubber drain hose must slope downward at least 3.6" (91.4 mm) per foot along its entire length. If connecting a drainpipe to the rubber hose, use a PVC pipe with a minimum inside diameter of ¾" (19.1 mm) and a downward slope of at least ¼" (6.4 mm) per foot.
  - Pipes running in or along exterior walls must be wrapped with self-regulating heat tape and insulated to prevent freezing.

Avoid connecting the main drain hose to a barbed fitting. Instead, run it directly into a ¾" (19.1 mm) PVC pipe for optimal performance and fewer connection issues.

⚠CAUTION

The section of the rubber condensate hose that is exposed inside the room must be wrapped in anti-condensation insulation. Without proper insulation, condensation can form on the outside of the hose due to the temperature difference between the cold condensate and the warmer room air. This can lead to water dripping onto the floor, potentially damaging flooring materials.

Preparing an In-the-Wall Drain
To prepare an in-the-wall drain:

1. **Install a drainpipe in the wall.**
   - This must be performed by a licensed plumber.
   - The drainpipe must have a minimum interior diameter of ¾" (19.1 mm).
   - The drainpipe must be topped with a 45° fitting.
   - The opening of the 45° fitting must line up with the external condensate hole (marked D) on the template.
   - If the drainpipe is in an exterior wall, wrap the drainpipe in insulation and heat tape.

⚠WARNING

Only use self-regulating heat tape or heat tape designed for use under insulation. Use of any other type of heat tape may result in a fire and void your warranty.

2. **Test the drain.**
   - Pour water into the drainpipe.
   - Check for leaks.

Preparing an External Drain
To prepare an external drain:

1. **Drill a drain hole.**
   a. Bore a drain hole through the exterior wall. The drain hole must have an outward slope of at least 2% (¼" [6.4 mm] per foot).
   b. Ensure that the drain hole and assembly allow for a downward slope of at least 2% from the condensate drain under the AIO® Wall Mounted unit.
2. **Insert the rubber drain hose through the drain hole.**
3. **Test the drain.**
   a. Pour water into the drainpipe.
   b. Check for leaks.

6.6 Preparing the electrical connection

The AIO® Wall Mounted unit can be connected to a mains power supply in one of two ways:

- Using the Leakage Current Detection Interrupter (LCDI) power cord.
- Hardwiring the unit directly to the mains power supply.

This section provides information on both methods.

⚠WARNING

Only a licensed electrician may prepare the electrical connection.

⚠WARNING

To prevent electrical shock, fire, or serious injury:

- A dedicated circuit breaker must be installed for all connection types (LCDI or hardwired).
- For hardwired installations, an emergency disconnect switch is also required:
  - Use a double-pole disconnect for 230V units.
  - Use a single-pole disconnect for 115V units that disconnects the live (hot) wire only.
- **Failure to follow these requirements may result in serious injury or death.**

⚠CAUTION

- To avoid damage from voltage spikes or power surges, the unit must be connected to a dedicated surge protector or a building-wide surge protection system.
- **Failure to use surge protection can result in equipment failure and may void the warranty.**
- Do not connect the unit to a Ground Fault Circuit Interrupter (GFCI), because normal unit operation may cause it to trip unnecessarily.

LCDI Power Cord Connection
You can purchase an LCDI power cord to use with the AIO® Wall Mounted unit. In this case, the AIO® Wall Mounted unit can be connected to the power supply by plugging the cord into a properly sized and grounded electrical power outlet.

The outlet must match the LCDI power plug on the cord and be within reach of the power cord.

Figure 7. LCDI Power Cord Connection

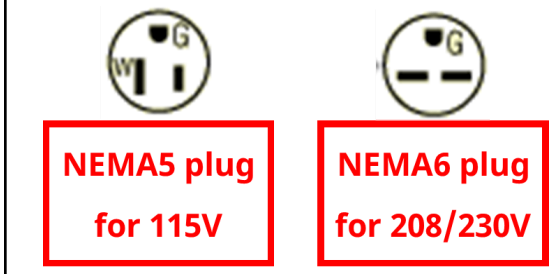

⚠ WARNING

- Do not alter the LCDI power cord or plug.
- Do not use an extension cord to connect the LCDI power cord to an outlet.

Pre-Connection Checklist
Before connecting the LCDI power cord to the power outlet, check that:

- ☐ The power supply voltage and frequency comply with the data plate on the AIO® Wall Mounted unit.
- ☐ The power outlet is a grounded connection and is rated for the maximum wattage indicated on the data plate of the AIO® Wall Mounted unit.
- ☐ Power is supplied only via a power outlet suitable for the supplied plug on the LCDI cord.
- ☐ The power supply has suitable protection against overloads and/or short circuits. It is recommended that you use a correctly-sized time-delay fuse or other equivalent device.

⚠ WARNING

- The power supply cable (LCDI cord) may only be replaced by a licensed HVAC contractor, in compliance with current national and local regulations.

⚠ WARNING

- **Improper wiring may result in death, serious injury, and/or property damage.**

Hardwired connection

The AIO® Wall Mounted unit can be hardwired directly to a correctly sized, dedicated circuit breaker. You can hardwire the AIO® Wall Mounted unit using a quick-disconnect whip cord, available from INNOVA.

All connections must be made in accordance with the National Electrical Code and any local authorities with jurisdiction. Only qualified electricians may perform this installation.

To prepare a hardwired connection:

1. **Mount a junction box behind the unit at the location marked (B) on the template.**
   - A junction box provides a protected enclosure for electrical connections and is required by some electrical codes.
   - Follow all applicable codes regarding flush, surface, or recessed mounting of boxes.
2. **Wire the junction box.**
   - Ensure that the power to the breaker is off.
   - Route the electrical wire from the breaker box to the junction box. Make sure that the wire is rated for the load.
   - Connect the wire to the junction box.

To make a hardwired connection:

1. Disconnect power at the main fuse or breaker panel.
2. Remove the inlet grille.
3. Remove the two upper screws securing the decorative side panel. Lift the panel slightly and remove it.
4. Remove the two upper screws securing the electrical cover, and remove the cover.
5. Disconnect the existing power cord by loosening the three screws from the terminal block.
6. Connect the new power cable, including the ground wire.



- We strongly recommend using our LCDI or Quick-connect whip cords.
- If customers choose not to use these options, any alternative electrical configuration must comply with all applicable local codes.
- All electrical connections must be performed by a licensed electrician and rated for the appropriate voltage and amperage.

6.7 Mounting the unit on the Wall Bracket

After checking that the bracket is securely anchored to the wall, is 100% level, and that all necessary electrical connections and condensate drain preparations are completed, you can mount the unit on the bracket.

To mount the AIO® Wall Mounted unit onto the wall bracket:

1. **Lift the AIO® Wall Mounted unit and clip it to the prongs on the wall bracket.**
   To ease placement, tilt the bottom of the unit slightly away from the wall.

⚠WARNING

The unit must be lifted by two people.

2. **Check that the unit is level.**
   - It is recommended that you use a digital level.
   - The unit must be at least 98% level.

6.8 Fastening the Anti-Lift Brackets

Two Anti-Lift Brackets are provided to secure the AIO® Wall Mounted Pro Unit in place during installation and operation. These brackets must be installed on either side of the rubber drain hose to maintain the correct slope of the unit, ensuring reliable long-term performance.

⚠WARNING

- Ensure that the brackets are fastened as instructed.
- Failure to properly secure the Anti-Lift Brackets may result in the unit detaching from the wall bracket, causing serious injury or property damage.

To fasten the Anti-Lift Bracket to the wall:

1. **Position the Anti-Lift Bracket over the template.**
   - Ensure that the screw hole on the template (marked **E**) is positioned over a wall stud.
2. **Secure the Anti-Lift Bracket to the wall.**
   - Use a screw to attach the Anti-Lift Bracket to the wall.
   - If the wall is hollow, use four ¼" (6.4 mm) load-bearing wall anchors that support at least 50 lbs (22.7 kg) and can be removed cleanly from the wall.

6.9 Checking for air leakage

Many walls are not perfectly straight. This can create a situation where there is a gap between the vent sleeves and the rear of the AIO® Wall Mounted unit.

After mounting the AIO® Wall Mounted unit on the wall bracket and fastening the Anti-Lift Bracket, check that the unit is tightly up against the wall on all sides.

To check for air leakage:

1. Temporarily mount the AIO® Wall Mounted unit on the bracket.
2. **Darken the room.**

- Close the curtains in the room.
- If there are no curtains, use opaque material to cover the windows.
- Turn off the lights in the room.

3. **Check the wall for air gaps.**
   - Inspect the area where the AIO® Wall Mounted unit meets the wall.
   - Check all sides to see if there is any light infiltration.
   - If the sleeves are secure against the back of the unit, there should be no light infiltration.
4. **If there are air gaps:**
   - **Lift the unit off the wall bracket. Set aside.**

⚠WARNING

- The unit must be lifted by two people.
- Lift the unit from the sides of the bottom base.
- Be aware that the unit is unbalanced on the right (compressor) side. Support this side securely during lifting.
- Lift with your legs, not your back.
- **Failure to follow these instructions can result in back or other injury.**

   - **Build up the area around the vent openings.** Use closed-cell foam tape of appropriate thickness.
   - **Ensure that:**
     - No air can move between the intake and the exhaust.
     - Outside air cannot infiltrate the room.
     - Exhaust air cannot leak back into the room.

6.10 Connecting the unit to the power supply

The unit can be connected to a mains power supply using an LCDI power cord or a hardwired connection.

Connecting the unit with an LCDI Power Cord
To connect the unit with an LCDI power cord:

1. **Plug one side of the LCDI power cord into the power connector on the bottom right side of the unit.**
2. **Plug the LCDI power cord into the power outlet prepared for the unit.**
3. **Secure all wiring.**

Connecting the unit with a hardwire
You can purchase a whip cord to connect the unit to the power supply or create your own power cable.



If you want to use your own wiring to connect the AIO® Wall Mounted unit to the junction box, ensure that the wire gauge is appropriate for the voltage, amperage, and the length of the cable.

To connect the unit using a whip cord:

1. **Unscrew the Decorative Side Panel on the right side of the unit and set it aside.**
2. **Insert the male connector on the whip cord into the female connector on the unit's power terminal.**
3. **Reattach the decorative panel on the right side of the unit.**
4. **Connect the wires on the other end of the cable to the junction box.**
   - For 115V units:
     i. Connect the brown wire to the live.
     ii. Connect the blue wire to neutral.
     iii. Connect the yellow wire to ground.
   - For 230V units:
     i. Connect the brown and blue wires to the live phases.
     ii. Connect the yellow wire to ground.

6.11 Connecting the condensate drain

⚠CAUTION

- For installations in regions subject to **freezing winter conditions**, drain line piping must strictly adhere to the following pitch (slope) requirements to prevent ice blockages, water backup, and potential property damage:
  - **Direct Outdoor Drainage:** Any drain line routing directly to the outside environment **MUST maintain a minimum 30% pitch (approximately 3.6 in. per 12 in. / 300 mm per 1 meter)**. This steep slope ensures rapid, complete water evacuation before freezing can occur within the pipe.
  - **Internal Riser Drainage:** Drain lines routed into an internal building riser **MUST maintain a standard minimum pitch of 2% (approximately ¼ in. per 12 in. / 20 mm per 1 meter)**.
- Do not allow sags, traps, kinks, or low points where water can collect and freeze.
- The installer must verify proper condensate drainage during commissioning before operating the unit.
- Failure to follow these pitching guidelines in freezing environments will void the warranty for water damage caused by frozen or blocked drain lines.

This section provides information about connecting the AIO® Wall Mounted unit to the prepared condensate drain.

Connecting an In-the-Wall Drain
To connect the rubber hose to an in-the-wall drain:

1. **Prepare the rubber hose.**
   Cut the end of the rubber hose as needed, but make sure there is enough left that **at least 4"**

(101.6 mm) of the hose can be inserted into the pipe.

The rest of the steps in this procedure can only be done after the unit is mounted on the wall bracket.

2. **Connect the rubber hose to the drainpipe.**
   - Gently push at least 4" (101.6 mm) of the rubber hose into the drainpipe.
   - Be careful not to squeeze or crimp the rubber hose.
   - Ensure that the rubber hose fits in the drainpipe snugly and will not pop out or otherwise detach from it.
3. **Insulate the rubber hose.**
   - Wrap the part of the rubber hose that is in the room with anti-condensation, insulating material.

Connecting an external drain

To connect the rubber hose to an external drain:

1. **Insert the rubber hose into the drain hole.**
   - Gently push at least 4" (101.6 mm) of the rubber hose into the drain hole.
   - Be careful not to squeeze or crimp the rubber hose.
   - Ensure that the rubber hose fits in the hole snugly and will not pop out.
2. **Seal the connection.**
   - Seal the area around the rubber hose so that air and water cannot flow from the drain hole into the room.
   - Use best practices based on the application and materials used.
3. **Insulate the rubber hose.**
   - Wrap the part of the rubber hose that is in the room with anti-condensation, insulating material.
4. **Insulate any external piping.**
   - If you extend the drain with any exterior piping, wrap all the pipes with heat tape and insulation.

⚠ WARNING

Only use self-regulating heat tape or heat tape designed for use under insulation. Use of any other type of heat tape may result in a fire and could void your warranty.

Figure 8.

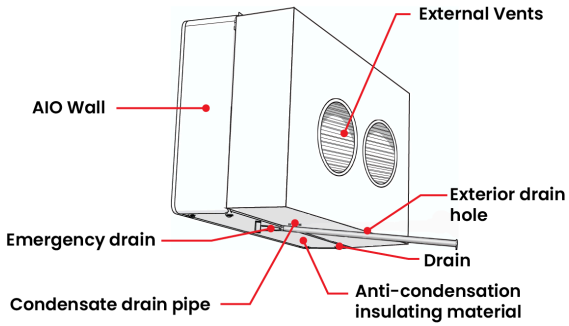

6.12 Condensate drain maintenance

To reduce the risk of zooglea biofilm formation and maintain effective drainage, apply a coil-safe drain line cleaner (such as Valterra PowerMax) to all drain line components during installation. This helps inhibit early microbial growth within the system.

For ongoing maintenance, clean all condensate drain line components, including drain pans, collection boxes, pumps, and associated tubing, at least once every six months. In more demanding environments, more frequent cleaning may be necessary.

Always use coil-safe cleaning products to protect system components and ensure long-term performance.

7. TESTING THE UNIT

After installation, it is important to test the AIO® Wall Mounted unit to ensure proper operation.

To test the unit:

1. Check that the power supply is within an acceptable range and that the unit is properly grounded.
2. Set the unit to Cooling mode on the lowest temperature setting, and verify that it is blowing cold air into the room.
3. Turn the unit off.
4. Wait 10 minutes.
5. Set the unit to Heating mode at the highest temperature setting, and verify that it is blowing warm air into the room.
6. Test each fan speed.
7. If installed with a wall-mounted or remote controller, repeat steps 2-5 using the controller.
8. Ensure that the required clearances are not obstructed.

8. CONFIGURING THE UNIT

The AIO® Wall Mounted unit can be configured for the following situations:

- When the unit is mounted high on a wall.
- When the unit is used with an occupancy sensor.

8.1 Configuring the unit for a high wall application

The AIO® Wall Mounted unit can be installed in a high-wall application. By default, the unit is factory-configured for low-wall installation, where the air flow is directed upward. This works well for heating and cooling when the unit is installed near the floor.

For high wall application, the direction of the air flow must be modified by adjusting the position of the air louver so that air blows downwards instead of upwards. This is achieved by modifying the bracket on the unit and changing the program code.

Additionally, a lower cover panel (Part GB0737II) should be installed to cover the unfinished bottom of the AIO® Wall Mounted unit.

⚠ WARNING

When the AIO® Wall Mounted unit is in the OFF position, voltage is still being supplied to the electrical controls. To avoid electric shock or damage to the AIO® Wall Mounted unit, disconnect the power to the unit before opening it by doing one of the following:

- Unplug the power supply cord from the power outlet.
- Turn off the circuit breaker or remove the fuse.

Failure to follow this warning can result in death, serious injury, and/or property damage.

To configure the AIO® Wall Mounted unit for high wall installation:

1. Change the louver bracket.
2. Program the louver direction.

Changing the louver bracket

1. **Ensure that the AIO® Wall Mounted unit is disconnected from the power supply.**
2. **If the front cover of the unit is still attached, remove it.**
3. **Remove the screws from the right-side louver bracket.**

Figure 9. Remove screws

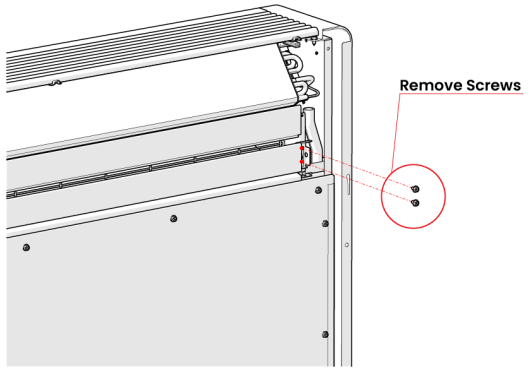

4. **Rotate the right-side louver bracket.**

Figure 10. Rotate the right-side louver bracket

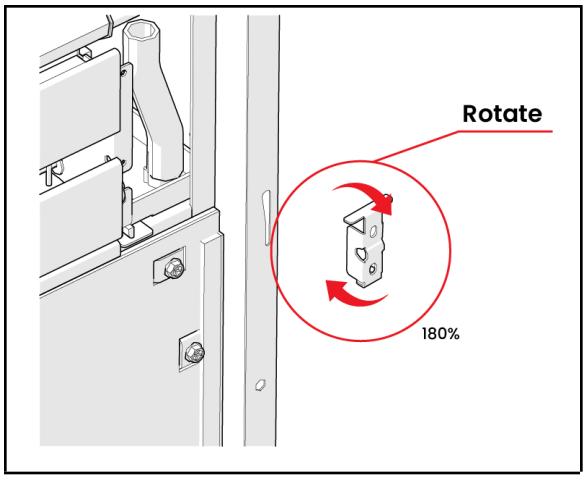

5. **Reinstall the right-side louver support bracket screws.**
6. **Reinstall the Front Cover Panel and grille.**
7. **Install the lower cover panel (Part GB0737II) on the bottom of the AIO® Wall Mounted unit.**
   For more information, see the documentation for the lower cover panel.

Programming the Louver Direction

Once the physical modifications have been made to the AIO® Wall Mounted unit, including installing the lower body cover and changing the direction of the louver bracket, the AIO® Wall Mounted unit must be programmed as well. The programming will be stored in the unit and will not be lost if there is a power outage or when the power cord is disconnected.

To program the louver direction:

1. **Reconnect the AIO® Wall Mounted unit to the power supply.**
2. **Press ⏻ on the Onboard Touch Controller to activate the display.**
   The unit can be in any mode.
3. **Press and hold for about 10 seconds.**
   The **DN** (low wall installation) icon will flash on the display.
4. **Press again.**
   The **UP** (high wall installation) icon will flash on the display.

   Do **not** touch the display. After a few seconds, the display returns to normal.

   The louver direction is now programmed for high wall installation.

8.2 Connecting a Dry Contact

The AIO® Wall Mounted unit supports integration with dry contact devices (voltage-free switch inputs used to control the unit's operation). These may include occupancy sensors, open-window switches, on/off remotes, or other compatible control systems. When used, these devices can automatically activate or deactivate the unit as needed.

When the dry contact opens, the unit enters standby mode and displays CP (Contact Present) on the screen.

To minimize electrical interference, use only shielded cable when connecting a dry contact input.

For models with auxiliary electric heat, do not abruptly cut power to the unit, as this may cause internal overheating. Instead, use the CP contact to place the unit in standby mode, which allows the unit to run its cool-down ventilation cycle before shutting down completely.

⚠ WARNING

- Turn off all electrical power before making any connections. All electrical connections and wiring MUST be installed by a qualified electrician and conform to the National Electrical Code, as well as all local codes with jurisdiction.
- **Improper wiring may result in death, serious injury, and/or property damage.**

To connect a dry contact:

1. **Turn off the power**
   a. De-energize the Unit: Before accessing the filters, always switch off the power to the unit to prevent accidental activation and ensure safety. Unplug the power cord, or turn off the breaker and wait at least five minutes, and confirm that all indicator lights are off before continuing.
2. **Remove the Air Filter.**
   a. Lift the grille from the unit and set it aside.
   b. Gently pull up on the plastic around the filter. **Note:** Take care not to break the plastic or tear the filter.
3. **Remove the Front Cover Panel.**
   a. Unscrew the two front screws on the top of the unit (labeled in the following figure).

Figure 11. Unscrew the two front screws

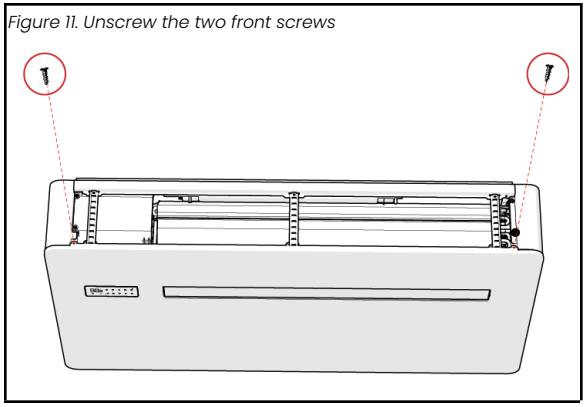

b. Gently pull the top panel forward and set it aside.

⚠CAUTION

When removing the Front Cover Panel of the AIO® Wall Mounted (Gen 2) unit:

- The Onboard Touch Controller is clipped to the back of the Front Cover Panel, and a wire harness connector is soldered directly to the back of the controller.
- Do not pull the panel abruptly, because this can tear the connector from the Onboard Touch Controller, causing damage.
- Carefully disconnect the wire harness connector before fully removing the Front Cover Panel to avoid damaging the connector or the Onboard Touch Controller.

4. **Remove the black plastic electrical protective cover.**
   a. Remove the two screws that secure the black plastic electrical protective cover to the white metal frame of the AIO® Wall Mounted unit and set them aside.

Figure 12. Remove the two screws

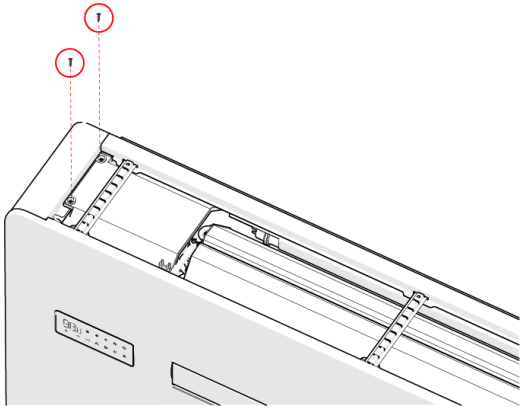

Keep the screws separate from the screws removed previously.

   b. Remove the black plastic electrical protective cover and set it aside. The internal components of the unit will now be visible.

5. **Connect the dry contact to the board.**
   See the following image for the proper connection points.

Figure 13. Proper connection points

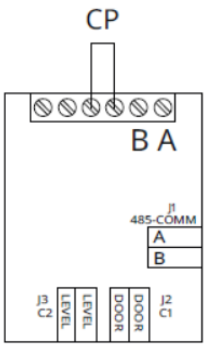

6. **Position the black plastic electrical protective cover in place.**
   a. Do not secure the cover with screws until after the unit has been tested.
7. **Test that the dry contact works properly.**
   a. Power up the AIO® Wall Mounted unit.
   b. Activate and deactivate the connected control device (e.g., occupancy sensor) to verify that the unit responds correctly: turning on and entering standby mode as expected.
8. **Secure the plastic cover.**
   a. Reattach the black plastic electrical protective cover to the white metal frame of the AIO® Wall Mounted unit using the two screws removed in Step 4a.
9. **Finish closing the unit.**
   a. Position the Front Cover Panel on the AIO® Wall Mounted unit.
   b. Reattach the Front Cover Panel to the AIO® Wall Mounted unit using the two screws removed in Step 3.
   c. Reinsert the Air Filter into the AIO® Wall Mounted unit.
   d. Reinsert the grille above the filter.

8.3 Configuring heat strip wattage

The AIO® Wall-Mounted Unit 230V with Heat Strip includes two 900 W heating strips, which can operate together (1800 W) or individually (900 W). Use this procedure to configure the desired wattage during installation or at first startup.

1. **Turn off the power.**
   - Disconnect power to the unit to prevent accidental activation.
   - Unplug the unit or switch off the circuit breaker.
   - Wait at least 5 minutes and verify that all indicator lights are off before proceeding.
2. **Access the Heating settings.**
   - On the onboard touch controller, select Ht.
   - Select NO to disable the heating strips.
3. **Set the Heating wattage.**
   - Select r1 for 900 W operation.
   - Select r2 for 1800 W operation.

4. For 900 W Operation Only:

- Disconnect the connector for one heating strip on the PCB (see images below).

Figure 14. Configuring heat strip wattage

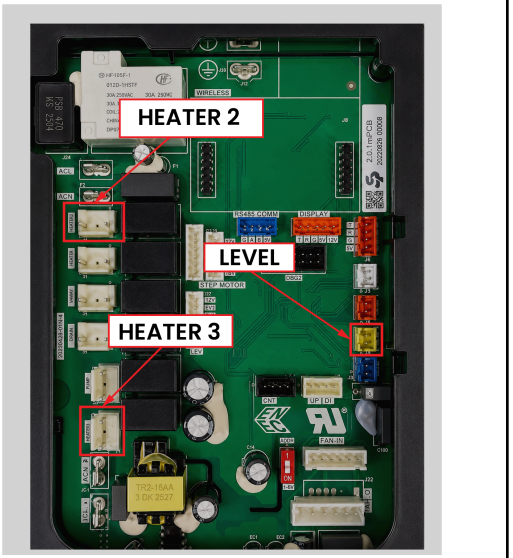

Figure 15. Configuring heat strip wattage

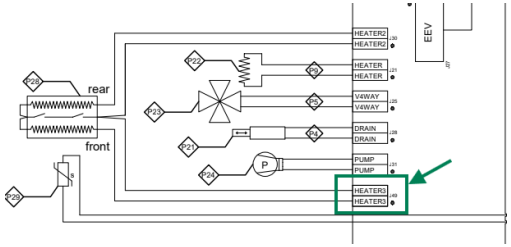

- Cut off the plug from the disconnected wire to prevent reconnection.
- Wrap wire ends with electrical tape or use a wire nut to insulate them.

5. Label the Configuration.

- Mark 900 W or 1800 W on the unit's label for future reference.

Figure 16. Label the configuration

Installer Responsibility	900W	1800W
Power supply (V/Ph/Hz)	230/1/60	230/1/60
Voltage range	180-253	180-253
Running Amps Cooling	3.4	3.4
Max Amps Cooling	7.8	7.8
Running Amps Heating	6.8	10.7

9. SELF-CERTIFYING THE INSTALLATION

To ensure the AIO® Wall Mounted unit operates correctly, we recommend that the installation be self-certified and approved by INNOVA before the unit is used.

For more information about self-certifying, refer to the Self-Certification Training Guide.

For information about the warranty ramifications of self-certifying the installation, refer to the Warranty.

9.1 Post-Installation Certification Checklist

The following items must be inspected after installation:

Appropriate Use

- ☐ The AIO® Wall Mounted unit's cooling and heating capacity is sufficient to cool and heat the room in which it is located.
- ☐ The interior vents are not blocked by any furniture, plants, or window coverings.

Mounting

- ☐ The wall bracket is securely hung, with at least two screws anchored in concrete or wood, and the other four screws are ¼" (6.4 mm) load-bearing wall anchors that support at least 50 lbs (22.7 kg) and can be removed cleanly from the wall.
- ☐ The unit is mounted level on the vertical axis and positioned at a ⅛" (3.2 mm) slope to the right on the horizontal axis.
- ☐ The unit is flush to the wall with no gaps between the wall and the back of the unit.
- ☐ The Anti-Lift Bracket is fastened to wood or concrete with ¼" (6.4 mm) load-bearing wall anchors that support at least 50 lbs (22.7 kg) and can be removed cleanly from the wall.
- ☐ The tip sensor is clear.

External Vents

- [ ] The vent sleeve is sealed inside the wall with no gaps.
- [ ] Approved exterior grilles are installed.
- [ ] The exterior grilles are installed correctly.
- [ ] The exterior grilles are properly sealed.
- [ ] The external vent holes are 100% aligned internally with the AIO® Wall Mounted unit's vent holes.
- [ ] The exterior vents are not blocked by walls or plants.

Electrical

- [ ] The power receptacle is in good working condition, and the LCDI plug fits snugly if using an LCDI cord.
- [ ] The circuit breaker is within the required specifications.

Drainage (if using for heating)

- [ ] The condensate drain is connected and working.
- [ ] The external condensate drain is pitched correctly.
- [ ] The external condensate drain's exterior wall drain hole is properly sealed.

10. FINAL STEPS AFTER INSTALLATION

Before leaving the installation site, ensure that the following tasks are completed:

- [ ] **Clean-Up:** Remove all packaging materials and wipe off any dust or debris from the unit using a damp cloth.
- [ ] **User Handoff:** Review the following with the user:
  - Key features and specifications of the unit
  - Basic operating instructions
  - Routine maintenance requirements
- [ ] **Protect the unit**
  - If the unit is installed in an environment with salt, chemical, or acidic air exposure, apply a protective coil coating, such as DiversiTech Coil Guard, to protect the coil surfaces from corrosion and ensure long-term performance.
  - If the unit is installed in a construction environment, protect the unit in tight plastic wrap and do not operate it until all dust and debris in the environment has been removed.

⚠CAUTION

- Failure to properly wrap the unit and disconnect its power in dusty or active construction or renovation environments can result in damage to internal components and void the warranty.

11. WIRING DIAGRAMS

The following are the wiring diagrams for AIO® Wall Mounted units.

11.1 AIO® Wall Mounted 115V Wiring Diagram

To view the diagram as a high-resolution PDF, click the link below:

AIO Wall Mounted 115V Heat Pump only Wiring Dia...

Figure 17. Wall Mounted 115V

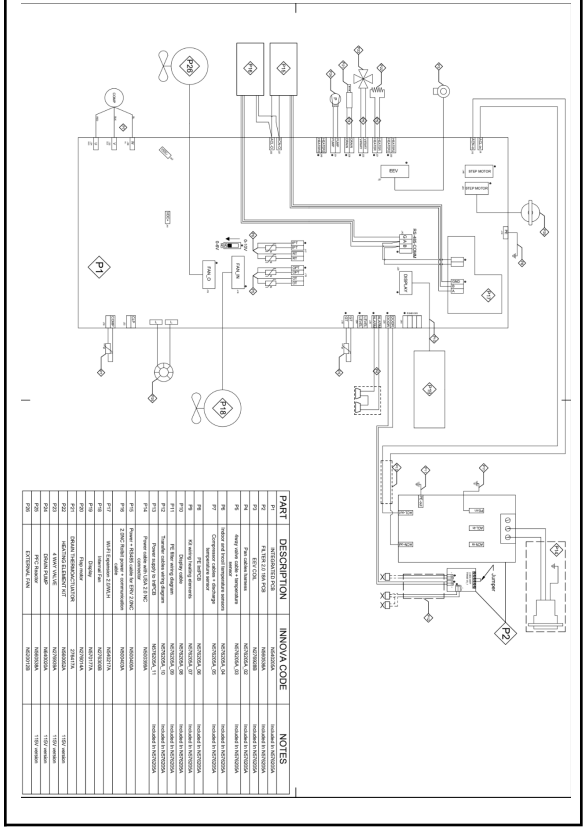

11.2 AIO® Wall Mounted 230V Wiring Diagram

To view the diagram as a high-resolution PDF, click the link below:

AIO Wall Mounted 230V Heat Pump Only Wiring Di...

Figure 18. Wall Mounted 230V

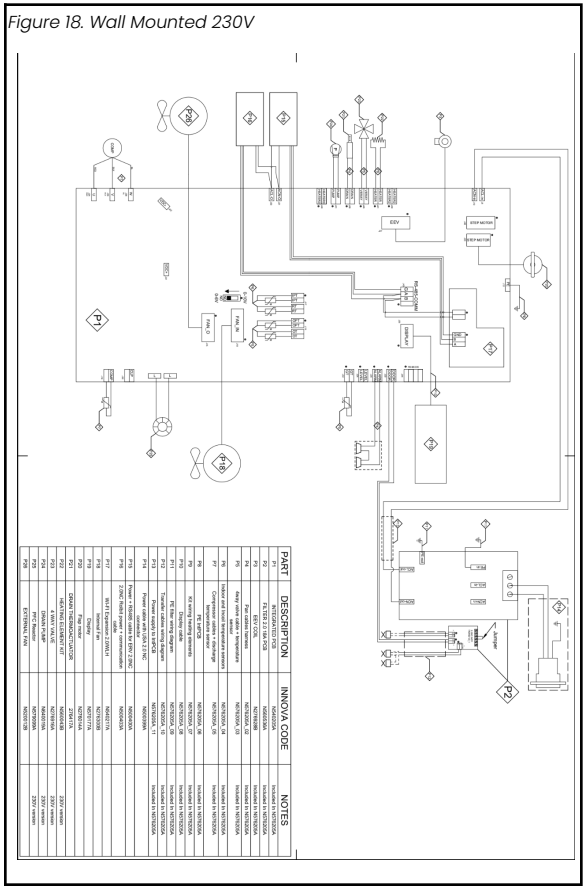

11.3 AIO® Wall Mounted 230V with Heat Strip Wiring Diagram

To view the diagram as a high-resolution PDF, click the link below:

AIO Wall Mounted 230V with electric heat (V 5.0)....

Figure 19. Wall Mounted 230V with electric heat

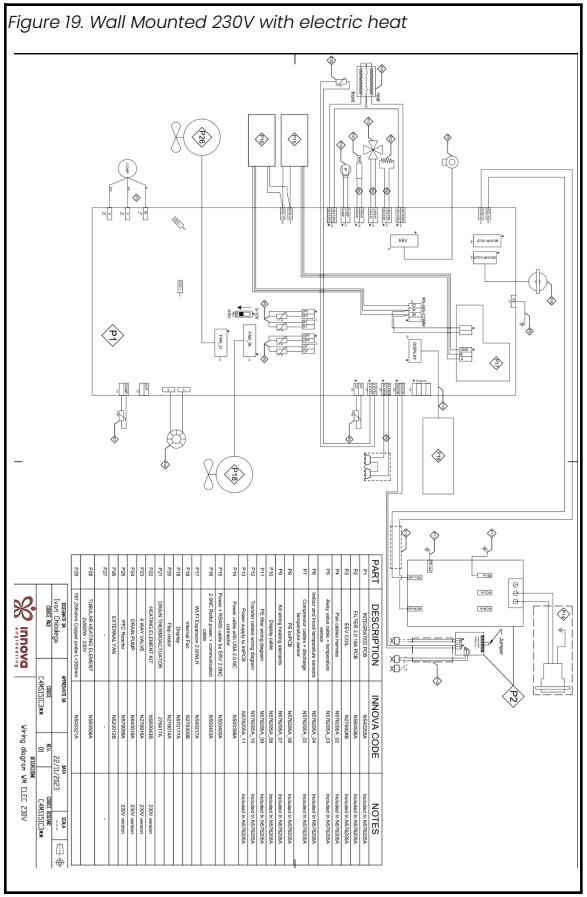

12. WARRANTY

12.1 Basic Coverage

- **Parts:** 5 years from delivery.
- **Compressor:** 10 years from delivery.
- **Labor:** 2 years from certification (only if at least 10 units are installed, the site is certified by INNOVA or self-certified, and spare stock equal to 3% of total units is maintained)
- **Controllers:** Covered under a 2-year warranty.

12.2 Optional Extended Coverage

- **Additional 2-Year Parts & Labor Warranty:** Extends the basic coverage to 4 years labor and 7 years parts.
- **Extended 10-Year Parts Warranty:** Extends parts coverage to 10 years total.
- **Extended 5-Year Full Warranty:** Extends full parts and labor coverage to 5 years total.
- **Extended 10-Year Full Warranty:** Provides a 10-year full warranty on parts, labor, and compressor.
- **Extended 15-Year Full Warranty:** Provides a 15-year full warranty on parts, labor, and compressor.

12.3 Validation Requirements

- Installation must be certified by an INNOVA technician or self-certified within 30 days.
- Installers must complete INNOVA training.
- The system must comply with local codes, use approved louvers, and be properly maintained (e.g., clean filters monthly, coils every 18 months).

For warranty service or claims, contact INNOVA Support at vip@innova.co or (212) 204-2700.

For detailed terms and conditions, click the link below:

AIO Warranty Terms and Conditions - 2026 - INN...

With over 20 years of experience in the climate comfort sector, we have a clear goal: growth through innovation. Our team is laser-focused on the conception, development, and production of innovative heating, ventilation, and air conditioning solutions. This mission has developed through bringing together technical skills, creativity, technology, design, Italian passion, and a global vision to achieve the best energy efficiency and performance.

innova.co | **USA:** 216-710-1000 **Canada:** 416-739-1000

MADE IN ITALY

© 2026 INNOVA. All rights reserved.

Revised August 19, 2026