AIO® Wall Mounted (Gen 3)

Installation Guide



innova

AHRI CERTIFIED® www.ahridirectory.org
Unitary Small HP
AHRI Standard 210/240

Intertek

ENERGY STAR

CONTACT INFO

VIP Customer/Technical Support
Email: vip@innova.co
Phone: (212) 204-2700

AIO® is a registered trademark of INNOVA.
Copyright © 2026 INNOVA. All rights reserved.

DISCLAIMER

IMPORTANT: Installers must complete an INNOVA training session before installation. This document does not replace required training. Failure to complete training may result in improper installation and may void the warranty.

This documentation is intended for informational use only and should not be construed as a binding representation or contract. This documentation is provided "as is" without warranty of any kind, either express or implied. INNOVA and its affiliates disclaim all liability arising from the use or misuse of this documentation.

Illustrations may not be to scale, and all information and dimensions stated herein are subject to change at any time at the sole discretion of INNOVA. Benefits described herein apply only to the extent that the product is installed correctly in the correct application and used for its intended purpose.

INNOVA is constantly innovating and improving its products and reserves the right to modify product design and specifications without notice and without incurring any obligations.

CERTIFICATIONS & LISTINGS

The AHRI Certified® mark indicates INNOVA's participation in the AHRI Certification program. For verification of individual certified products, go to www.ahridirectory.org.

ETL Listed. Control Number: 5032306. Conforms to: UL 60335-2-40:2022 Ed.4 | CSA C22.2#60335-2-40:2022 Ed.4 | UL 60335-1:2016 Ed.6 | CSA C22.2#60335-1:2016 Ed.2

MODEL NUMBER NOMENCLATURE

The code identifies the family, model, version, size, voltage, accessories, refrigerant type, and ERV option. See the diagram below for details.

Figure 1. AIO® nomenclature

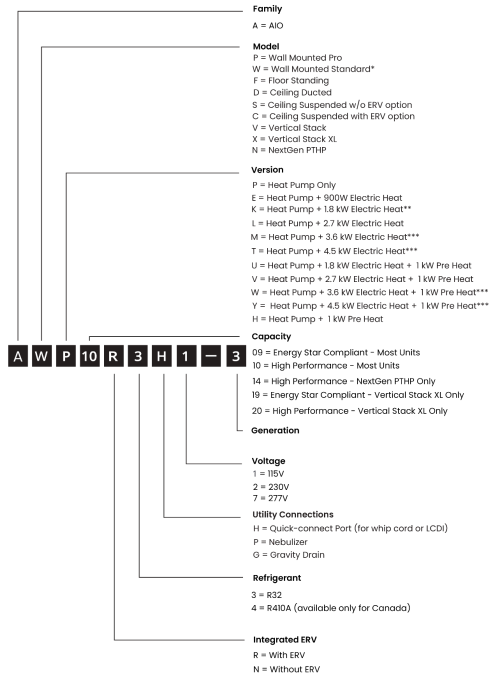

* 8" Vents : Just generation (e.g. = 3)

6” Vents : Generation + SP (e.g. = 3SP)

** Field convertible to 900W

*** AIO® Vertical Stack XL **Only**

CONTENTS

1. ABOUT THIS GUIDE..... 4

1.1 Documentation-specific language..... 4

1.2 Safety notices, icons, and symbols..... 4

2. SAFETY GUIDELINES - READ BEFORE INSTALLING..... 5

2.1 Fire/explosion hazards..... 5

2.2 Refrigerant hazards..... 5

2.3 Hot surface hazards..... 6

2.4 Electrical hazards..... 6

2.5 Moving parts hazards..... 7

2.6 Handling and mechanical hazards..... 7

2.7 Installation environment hazards..... 8

2.8 Installer responsibilities..... 9

3. AIO® WALL MOUNTED OVERVIEW..... 9

3.1 Components and structure..... 9

3.2 Optional accessories..... 10

3.3 Electric resistance heaters..... 10

3.3 Unit rating plate..... 10

4. RECEIVING & HANDLING THE UNIT..... 11

4.1 Shipping configuration..... 11

4.2 Carton dimensions and weight..... 11

4.3 Handling the unit..... 11

4.4 Inspecting the unit..... 11

5. TOOLS AND MATERIALS NEEDED..... 12

6. SITE PREPARATION..... 12

6.1 Pre-installation checklist..... 12

6.2 Minimum clearance requirements..... 13

7. INSTALLING THE AIO® WALL MOUNTED UNIT..... 14

7.1 Affixing the template to the wall..... 14

7.2 Affixing the bracket to the wall and preparing the anti-lift brackets..... 15

7.3 Preparing the vents..... 16

7.4 Attaching exterior louvers or other venting solutions..... 16

7.5 Preparing a condensate drain..... 17

7.6 Preparing the electrical connection at the unit..... 18

7.7 Mounting the unit on the wall bracket..... 20

7.8 Fastening the anti-lift brackets..... 20

7.9 Checking for air leakage..... 20

7.10 Connecting the unit to the building's power supply..... 20

7.11 Connecting the condensate drain..... 22

7.12 Condensate drain protection and maintenance..... 22

7.13 Powering on the unit for the first time..... 23

8. SPECIALIZED INSTALLATION CONFIGURATIONS..... 23

8.1 Configuring the unit for a high wall installation..... 23

8.2 Connecting a dry contact for remote on/off..24

8.3 Configuring heat strip wattage..... 25

9. STARTUP AND UNIT CONFIGURATION..... 26

9.1 Onboard touch controller overview..... 26

9.2 Verifying system status (Diagnostic menu)..... 26

9.3 Configuring the unit (User menu)..... 27

9.4 Installer menu (advanced settings)..... 27

9.5 Connecting to the INNOVA Wi-Fi app..... 29

9.6 Locking and unlocking the keypad..... 29

9.7 Configuration checklist..... 29

10. RECORDING STARTUP DATA AND TESTING THE UNIT..... 30

10.1 Recording startup data..... 30

10.2 Testing unit operation..... 30

11. POST-INSTALLATION TASKS..... 30

12. SELF-CERTIFYING THE INSTALLATION..... 31

12.1 Commissioning record..... 31

13. WARRANTY..... 31

13.1 Basic coverage..... 31

13.2 Optional extended coverage..... 31

13.3 Validation requirements..... 31

APPENDIX A - DIMENSIONS..... 32

APPENDIX B - WIRING DIAGRAMS..... 33

B.1 AIO® Wall Mounted 115V wiring diagram..... 33

B.2 AIO® Wall Mounted 115V (with resistance heating strips) wiring diagram..... 33

B.3 AIO® Wall Mounted 230V (with optional resistance heating strips) wiring diagram..... 33

B.4 AIO® Wall Mounted 230V diagram for attaching a third-party condensate pump..... 34

APPENDIX C - GLOSSARY..... 34

APPENDIX D - REVISION HISTORY..... 35

1. ABOUT THIS GUIDE

This guide outlines the procedures for safely installing the unit. Following these instructions reduces the risk of equipment damage, improper installation, and potential safety hazards.

Important: Read the installation guide and user guide in full before beginning any installation tasks. Pay close attention to all safety warnings and notices.

1.1 Documentation-specific language

Some language and symbols in this guide have specific meanings.

1.1.1 Reference to the product

Any reference to "the unit" is meant to refer to the AIO® Wall Mounted (Gen 3) unit.

1.1.2 Unit orientation

All directions in this guide (left, right, top, and bottom) are given from the perspective of facing the unit.

1.1.3 Role definitions

This guide is primarily intended for installers. The roles of end users and service technicians are also defined here for reference.

- **User:** A non-expert who can safely operate the unit and perform basic diagnostics and maintenance.
- **Installer:** A trained and certified HVAC installation technician responsible for the correct installation of the unit as indicated in the installation guide and in accordance with all applicable local and national codes.
- **Service technician:** A trained and qualified HVAC professional who performs service or maintenance in compliance with Occupational Safety and Health Administration(OSHA) safety requirements, recognized industry best practices, and all applicable federal, state, and local codes and standards.
- **Trained HVAC technicians:** A group term for both installation and service technicians.

1.1.4 Illustrations and diagrams in this guide

All illustrations and diagrams in this guide represent installations utilizing INNOVA-approved accessories. Actual field installations may vary; additional components, adjustments, or modifications may be required to comply with project-specific requirements, applicable codes, and standards.

1.2 Safety notices, icons, and symbols

Warnings, Cautions, and Attentions are included throughout this guide. Read each carefully and follow the stated instructions.

1.2.1 Safety notices

Each Safety Notice represents the level and immediacy of risk. Each warning panel displays a background color and a signal word. They may include an icon to specify the topic.

DANGER

The red notice with the **DANGER** title indicates an imminent hazard that, if not avoided, will result in death or serious injury.

WARNING

The orange notice with the **WARNING** title indicates a potential hazard that, if not avoided, could result in death or serious injury.

CAUTION

The yellow notice with the **CAUTION** title indicates a hazardous situation that, if not avoided, could result in minor to moderate injury or property damage.

1.2.2 Hazard icons

The hazard icons represent the type of risk and are used in conjunction with any of the warning panels.

	The flame icon indicates information related to a fire or explosion hazard.
	The lightning-bolt icon indicates a warning related to electrical hazards.
	The three vertical, S-shaped, parallel lines icon indicates information related to a hot surface hazard.
	The hand icon indicates information about a moving part hazard and a sharp-surface hazard.
	The slippery surface icon indicates information related to a slipping hazard.
	The exclamation-mark icon indicates general hazards (environmental hazards, moving parts hazards, lifting hazards, and other categories).

1.2.3 Annotation icons

Annotations are provided throughout this guide. It is essential to read each carefully and follow the instructions stated.



Indicates important information required for proper installation and operation. Failure to follow these instructions may result in reduced system performance.



Indicates supplemental information, tips, or useful background information.

2. SAFETY GUIDELINES - READ BEFORE INSTALLING

This guide outlines the steps to safely and securely install the AIO® Wall Mounted unit. By following these instructions, installers can significantly reduce the risk of equipment damage.

The installer is responsible for ensuring that the unit is installed safely and securely, in full compliance with all applicable federal, state, and local codes.

The precautions in this guide supplement, rather than replace, established safety practices. If there is a conflict, always follow the more stringent requirement.

Only a trained and certified HVAC installation technician may install this unit.

Read the entire installation guide before installing the unit. Follow all safety notices, warnings, and labels carefully. Failure to do so may result in property damage, serious injury, or death.

2.1 Fire/explosion hazards

⚠WARNING

- Do not store the unit in a room with continuously operating ignition sources (e.g., open flames, operating gas appliances, or electric heaters).
- Do not use any means to accelerate defrosting or clean the equipment other than those recommended by the manufacturer.
- In the event of abnormal conditions (such as a strange or burning smell, noise, or smoke), turn off the unit and disconnect it from its power source immediately. Report the issue immediately to your INNOVA representative or distributor.
- Servicing shall be performed only as recommended by the manufacturer.

2.2 Refrigerant hazards

⚠DANGER

- Flammable refrigerant is used. Only qualified HVAC technicians are authorized to handle refrigerant charging, recovery, or disposal.
- Do not pierce or burn refrigerant copper tubing. Be aware that refrigerants may not contain an odor.
- Do not puncture the refrigerant copper tubing.
- Do not expose the refrigerant copper tubing to heat sources, sparks, or open flames.
- Do not use an open flame or high-heat sources for leak detection (for example, halogen lamps); fire or explosion can result. Only use approved electronic detectors when checking for refrigerant leaks.
- Refrigerant under pressure: Use appropriate personal protective equipment (PPE) and follow all applicable OSHA safety requirements when servicing or handling the unit.

⚠WARNING

- Do not leave refrigerant cylinders in confined spaces; always store and use them in well-ventilated areas. Keep ventilation openings clear of obstruction.
- Do not charge, replace, or mix the R32 refrigerant with any other refrigerant type. Using other refrigerant types may damage equipment and pose safety risks.
- Do not install units utilizing flammable refrigerants in unventilated spaces unless the space is designed to prevent refrigerant concentrations from accumulating to levels that could create a fire or explosion in the

⚠WARNING

event of a leak. Note that refrigerant leaks may be odorless and difficult to detect.

- Never store or transport refrigerant cylinders in temperatures above 122 °F (50 °C).
- During storage, protect cylinders and the unit from mechanical damage, tipping, or corrosion.

⚠CAUTION

- Leak testing must be performed after installation is complete.
- This unit comes precharged with flammable refrigerant (R32). If the unit does not cool or heat, it may indicate a refrigerant leak. If a leak is detected, do not touch the unit. Ventilate the area, then immediately consult the building manager or the unit manufacturer. Refrigerants may cause cold burns.
- When handling the unit, verify that no other substance (including air) enters the refrigerant circuit other than the contained R32 refrigerant.
- Do not release refrigerant into the atmosphere; follow environmental regulations. In the US, refrigerant handling must comply with the EPA Clean Air Act Section 608 (certified personnel, recovery, reclaim, and recycling).
- Follow all local environmental regulations for refrigerant handling and disposal.

2.3 Hot surface hazards

⚠DANGER

- Only trained HVAC technicians may access internal components while the system is hot.
- Hot parts: Do not operate the unit with the cover removed. Certain components (compressor, coils, discharge piping, and other parts) may reach high temperatures during operation.

⚠CAUTION

- Allow sufficient time for surfaces to cool before handling or servicing. Contact with hot parts can cause burns or damage to equipment.
- Keep flammable materials away from hot surfaces at all times.
- Use appropriate PPE (such as gloves and protective clothing) when handling or working near hot components.

2.4 Electrical hazards

⚠DANGER

- Employ a qualified electrician to perform all electrical wiring and connections. These must comply with the National Electrical Code (NEC) and any applicable state and local codes.
- Before installation, maintenance, or servicing, disconnect power to the entire system, including remote disconnects, peripherals, third-party devices, power backup systems, and other devices operating on the network, and turn off breakers or switches located remotely, such as at the fuse box.
- Follow all OSHA-compliant lockout/tagout (LOTO) procedures.
- Do not open access panels until the power has been fully disconnected.
- Do not tamper with or modify the unit, because this could create unsafe operating conditions.

⚠ WARNING

- A certified electrician must make all connections.
- Wiring and grounding must comply with the National Electrical Code (NEC) and all applicable state and local codes and regulations. Improper wiring or loose connections may cause overheating, fire, or electric shock.
- Connect only to a dedicated branch circuit of proper ampacity, protected by a correctly sized overcurrent device (per unit nameplate and wiring diagram).

⚠ CAUTION

- Follow OSHA-compliant Lockout/Tagout (LOTO) procedures.
- Use only standard circuit breakers and fuses rated for the unit.
- Do not use an extension cord or adapter plug, or connect multiple devices to a single outlet, as this may cause a fire or electric shock.
- Do not modify plugs or remove the grounding pin; always connect to a grounded 3-prong power supply.
- Do not bundle, pull, damage, or modify the power cord. Do not place heavy objects on it or heat sources on or near it, as this may cause a fire or electric shock.
- Do not operate the unit with damaged electrical cords or plugs. If the power cord is damaged, it must be replaced by the manufacturer or by a qualified electrician.
- Do not connect the ground wire to gas pipes, lightning rods, or telephone ground.

⚠ CAUTION

- Ensure electrical panels are closed and secured before energizing equipment.
- In the event of a blackout or thunderstorm, turn the unit off and disconnect it from the power source immediately.

2.5 Moving parts hazards

⚠ DANGER

- Moving parts: Do not operate the equipment with panels, guards, or covers removed.
- Ensure power is disconnected and components have come to a complete stop before accessing the interior. Internal fans, motors, and other moving components may start automatically when power is supplied.

⚠ WARNING

- Keep hands, hair, tools, and loose clothing away from fans and moving components. Contact with moving parts can cause serious injury.
- Do not remove, bypass, or disable protective covers, guards, or safety interlocks.

⚠ CAUTION

- Only trained HVAC technicians are authorized to service the unit with the panels removed.
- Reinstall all panels before operation and keep your hands away from the fan area to prevent injury.

2.6 Handling and mechanical hazards

⚠ CAUTION

- Only a qualified HVAC professional may install this unit. The installer must be licensed, insured, or bonded, as required by state and local regulations.
- Protect control panel surfaces from being pressed with tools or sharp objects; use only your fingers to prevent damage.
- The unit is heavier on the right side (compressor side) and may be unbalanced when lifted.



Installation by anyone other than a trained and certified HVAC installation technician voids the unit's warranty.

⚠ CAUTION

- Edges inside the unit may be sharp; wear hand protection when handling sheet-metal parts to prevent cuts.

⚠ WARNING

- The AIO® unit is packed with plastic materials that pose a suffocation risk to small children and infants. In addition, some packing materials may have sharp edges or parts that can cause injury.
- It is the installer's responsibility to remove all packing materials from the installation site and dispose of them properly, in accordance with all relevant regulations.

⚠ CAUTION

- The unit must remain upright at all times.
- Tipping the unit — whether on its side, back, or at an angle can damage the compressor welds, causing refrigerant leaks.
- The package must be transported upright. If it was not, notify your INNOVA representative or contractor immediately.

⚠ DANGER

- Disconnect all electrical power before making any electrical connections. This includes turning off breakers or switches located remotely, such as at the fuse box.
- Follow all OSHA-compliant lockout/tagout (LOTO) procedures.
- Employ a qualified electrician to perform all electrical wiring and connections. These must comply with the National Electrical Code (NEC) and any applicable state and local codes.
- Do not open access panels until the power has been fully disconnected.
- Do not tamper with or modify the unit, because this could create unsafe operating conditions.
- Use copper conductors only.

⚠ WARNING

The unit contains capacitors that may retain an electrical charge after the power is disconnected. To avoid electrical shock or serious injury:

- Wait at least 5 minutes after disconnecting power.
- Confirm that all indicator lights are off.
- Verify with a voltmeter that capacitors are fully discharged before service.
- Do not begin any servicing or disassembly until all conditions above are met.

⚠ WARNING

The AIO® unit contains a pressurized refrigeration system:

- Do not puncture, heat, or incinerate the unit.
- The system contains refrigerant and refrigerant oil under high pressure. Before performing any service on the refrigeration system, the refrigerant must be safely recovered to relieve system pressure.
- The type of refrigerant used in this unit is listed on the unit's nameplate.
- Use only manufacturer-approved refrigerants and additives. Use of non-approved substances may damage the unit and void the warranty.
- If refrigerant gas leaks during installation, ventilate the area immediately. Refrigerants can produce toxic gases if exposed to fire or high heat.
- Do not use an extension cord to power the unit.

⚠ CAUTION

Make sure all louvers are INNOVA-approved. Installation of louvers or grilles that do not meet these specifications may cause:

- Overheating of the unit.
- Water damage.
- Reduced performance.
- Voiding of the product warranty.

⚠CAUTION

Install the unit in a location protected from impacts that could cause mechanical damage.

⚠WARNING

This unit contains R-32 refrigerant, which is classified as A2L—low toxicity and mildly flammable. The following precautions must be followed:

- Do not release R-32 into the atmosphere. It has a Global Warming Potential (GWP) of 675.
- Install the unit in a well-ventilated area to prevent refrigerant buildup.
- Take reasonable precautions to ensure the unit is not exposed to excessive heat.
- The use of leak detectors with halogen lamps is not allowed near R-32 systems.
- Make sure the room size matches the refrigerant charge. The refrigerant concentration must remain below the Refrigerant Concentration Limit (RCL) in case of a leak. For more information, refer to ASHRAE 15, ASHRAE 34, UL 60335-2-40, and applicable state and local codes.
- Use only mechanical connectors that comply with ASHRAE 15 (Safety Standard for Refrigeration Systems). Replace sealing components and, if connectors are reused, re-fabricate flared joints.
- If required, install a leak-detection system that detects refrigerant leaks and triggers ventilation or other safety responses.
- To prevent frostbite or other injuries, wear gloves and safety goggles when handling R-32.
- Store R-32 cylinders in a cool, ventilated space, away from heat sources, direct sunlight, or anything that could cause ignition.
- Attach R-32 cylinders securely to prevent them from shifting or being damaged.



The unit is designed for indoor installation only. Only the exterior intake and exhaust grilles are rated for outdoor exposure.

- The unit must be certified either by an INNOVA technician or through the approved self-certification process before use.
- If the unit is used without certification, the warranty will not be activated.
- If the unit operates for more than 30 days without certification, the warranty will be permanently void.
- It is the installer's responsibility to ensure that certification is completed.

2.7 Installation environment hazards

⚠CAUTION

- Do not operate the unit in or near an environment under construction or renovation. Dust and debris can enter the unit, causing malfunctions and reduced performance.
- Do not install above an elevation of 8,858 ft (2,700 m) unless specifically approved by the manufacturer — reduced air density may impair safe operation.
- Indoor installation only. Do not install outdoors or in locations exposed to rain, snow, or direct weather.
- When working at heights, follow all applicable fall protection regulations and guidelines. Use guardrails, harnesses, and barricade the area below to protect against falling objects.
- Verify the supporting structure can carry the full unit weight and operating loads, including vibration and dynamic loads.
- Install using proper anchors and fasteners, and apply the correct torque.

⚠CAUTION

- Keep the unit upright at all times; never lift it by its covers, panels, or refrigerant copper tubing.
- Protect the unit from impact, vibration, tipping, dust, and corrosive atmospheres during installation and operation.
- Do not install or store the unit in rooms with continuously operating ignition sources (e.g., open flames, gas appliances, or electric heaters).
- Maintain required service clearances and ensure ventilation openings remain unobstructed. Obstruction can cause malfunction or overheating.
- Dispose of all packaging materials safely to prevent suffocation, tripping hazards, or fire hazards.
- Follow all manufacturer instructions and applicable local building codes.

⚠WARNING

- Improper installation environments can result in fire, explosion, refrigerant leakage, equipment damage, or personal injury.
- Do not operate the unit in or near an environment under construction or renovation. Dust and debris can enter the unit, causing malfunctions and reduced performance.
- If the unit must be operated during construction or renovation, the air filters and accessible coil surfaces must be inspected and cleaned daily before operation.
- Failure to perform daily cleaning during construction use may result in damage and will void the warranty.

⚠CAUTION

- Units installed in coastal, shoreline, or saltwater environments must be ordered with factory-installed corrosion protection.
- Failure to use a factory-protected unit in such environments may result in accelerated corrosion and will void corrosion-related warranty coverage.

2.8 Installer responsibilities

- Install the unit safely and in accordance with all applicable federal, state, and local codes and regulations.
- Ensure that you fully understand the product and the installation procedures before beginning the installation. Installation activities involve greater risk than normal system operation.
- Provide the customer with the information necessary to operate the system safely after installation.

The safety precautions in this guide supplement recognized industry best practices. If a conflict occurs, follow the more stringent safety requirement.

3. AIO® WALL MOUNTED OVERVIEW

3.1 Components and structure

Figure 2. Unit components

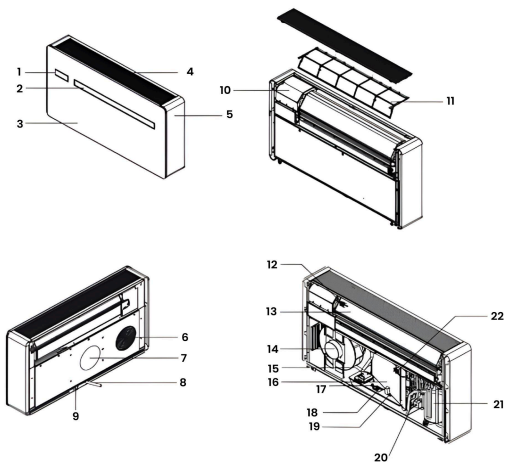

1	Onboard Touch Controller	**12**	Room Air Sensor
2	Supply Air Outlet	**13**	Indoor Heat Exchanger Coil
3	Front Cover Panel	**14**	Outdoor Fan
4	Return Air Grille	**15**	Condensation Pump
5	Decorative Side Panel	**16**	Outdoor Heat Exchanger Coil
6	Outdoor Air Intake	**17**	Maximum Level Float
7	Outdoor Air Exhaust	**18**	Level Float
8	Rubber Drain Hose	**19**	Condensation Drain Actuator
9	Anti-Lift Bracket	**20**	Four-Way Valve
10	Electrical cover	**21**	Compressor
11	Return Air Filter	**22**	Outdoor Air Sensor

3.2 Optional accessories

Table 1. Accessories list

Picture	Part	SKU	Factory Installed	Field Installed
	ERV module	AWERV30-3		✓
	External Nebulizer Drain Pan Kit	C0657001B6 C0657001B7		✓
	Quick connect whip cord	W224A W226A		✓
	LCDI power cord (available in four sizes)	L159A L221A L229A L259A		✓
	Sunvent Louvers	LLA8		✓
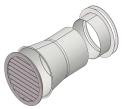	Thermaduct RLA8	RLA8		✓
	GWN Gateway - for LTCH20, TFTH20, and Modbus	GWN		✓
	GWX Gateway - LTCH20, TFTH20, MODBUS, BACnet, and third-party thermostats	GWX		✓
	LTCH20 Controller	LTCH20		✓

Picture	Part	SKU	Factory Installed	Field Installed
	TFTH20 Controller	TFTH20		✓
	LCD Infrared Controller	LCDW		✓
	Wireless Wall Mounted Infrared Controller	WRCH		✓
	Heat trace wire kit	GB1120		✓
	Underbody cover plate	GB0737II		✓
	Underbody cover plate (for unit with ERV module)	GB0744YU		✓
	Sidewall Adapter (Right/Left)	L01074II(R) L01075II(L)		✓
	Rubber Reducer Flange	RN300270A		✓

INNOVA, Inc. participates in the AHRI Unitary Small Heat Pump Equipment (USHP) Certification Program in accordance with the latest edition of ANSI/AHRI Standard 210/240.

Products listed in the AHRI Directory of Certified Product Performance may be identified as “AHRI Performance Certified.”

Certification confirms that published performance ratings have been

independently verified in accordance with AHRI requirements.

3.3 Electric resistance heaters

The AIO® unit is available with or without electric heat. Units with electric heat have one 900W heater (115V models) or two 900W heaters (230V models). For information on how to configure heat strip wattage in 230V units for 900 watts, see Section 8.3.

⚠WARNING

The AIO® Wall Mounted unit may not be configured to control external electric heat unless the unit comes with its own on-board electrical heating system installed. This may cause a safety hazard and void the warranty.

3.3 Unit rating plate

The unit's rating plate provides essential product information, including the model number, serial number, electrical specifications, and compliance markings. Refer to the rating plate when installing the unit, registering it, or contacting technical support. The rating plate is located on the black electrical cover and on the upper right side of the unit.

Do not remove or tamper with the rating plate. Doing so will void the product warranty.

4. RECEIVING & HANDLING THE UNIT

4.1 Shipping configuration

The unit and wall bracket are shipped in a single carton. Other accessories are shipped separately.

4.2 Carton dimensions and weight

Figure 3. Carton illustration

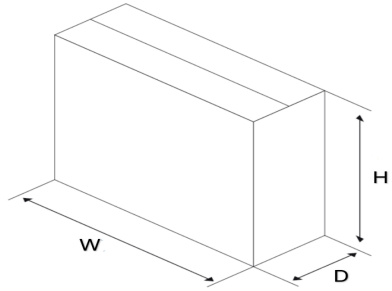

Table 2. Carton dimensions and shipping weight

Width (W)	43.30 in (1100 mm)
Height (H)	26.38 in (670 mm)
Depth (D)	10.04 in (255 mm)
Weight	99.21 lb (45 kg)

4.3 Handling the unit

⚠CAUTION

- The unit must remain upright at all times.
- Tipping the unit — whether on its side, back, or at an angle can damage the compressor welds, causing refrigerant leaks.
- The package must be transported upright. If it was not, notify your INNOVA representative or

contractor immediately.

To unpack the unit:

1. **Inspect the packaging**
   - Upon delivery, check all cartons for visible damage.
   - If there is damage, take clear photographs of the damage before opening the carton.
   - If the unit was delivered on its side, note this on the delivery receipt and notify your INNOVA representative or contractor.



If the unit was delivered on its side, place the unit upright and wait at least 24 hours before operating to allow the refrigerant oil to settle.

2. **Remove the unit from the carton.**
   a. Carefully remove the unit from the carton while keeping it upright. The unit is heavier on the right side (compressor side) and may be unbalanced when lifted.

⚠WARNING

- When lifting the unit, do not exceed the Recommended Weight Limit (RWL) defined by the National Institute for Occupational Safety and Health (NIOSH), and comply with all applicable national and local regulations for heavy weight lifting.
- Always use two people to lift and install the unit.
- **Failure to use proper lifting techniques can result in back injury or other physical harm.**

   b. Check the interior of the carton for signs of refrigerant leakage using an electronic leak detector compatible with R-32.



If refrigerant leakage is detected inside the carton:

- Do not install the unit.
- Report the issue immediately to your INNOVA representative or distributor.

3. **Perform basic functional testing (if necessary)**
   If the carton was damaged but the unit appears physically intact, after unpacking, test the unit in both heating and cooling modes. Report any irregularities or operational issues immediately to your INNOVA representative or distributor.
4. **Verify package contents**
   Verify the contents of the carton against the components list to ensure that all components are present. If any items are missing, contact your INNOVA representative or distributor immediately.

⚠CAUTION

- When removing any panel from the unit, handle it carefully to avoid damaging any wiring connections underneath.
- Use extra care when removing the front panel, as it contains electrical wiring connected to the display/control assembly.
- Do not pull, yank, or allow any panel to hang unsupported during removal. Support the panel carefully and disconnect any wiring connectors before fully removing the cover.
- Failure to follow these instructions may damage the wiring and void the warranty.

4.4 Inspecting the unit

After unpacking the unit, inspect it thoroughly before proceeding to installation:

1. Access the unit's nameplate (located on the right side of the unit and on the black electric cover), and ensure it matches the order and shipping documents.
2. Inspect the unit and all accessories for any damage that may have occurred during shipping.

   If the unit appears damaged:

   a. Remove the outer covers to inspect for underlying damage.

   b. Photograph all damage and all sides of the unit to support a damage claim.

   c. Clearly document the damage on the freight bill.

   d. Notify your INNOVA representative or distributor.



Report all damage within two weeks of delivery to be eligible for a claim.

4.4.1 Drain tube clearance check

Before installing the unit, follow these steps to inspect the drain tubes and ensure proper drainage:

1. Open the front cover panel of the heat pump to access the internal components.
2. Locate the two drain tubes connected to the drain pan. These are positioned on the right side of the unit, directly below the high-efficiency indoor heat exchanger (see Components). There is one drain tube in the front and one in the back.
3. Check whether either drain tube is pressing against the internal metal divider separating the unit's upper (inlet) and lower (outlet) sections. If a tube is pressing upward against the metal plate, it may push the drain pan up, preventing proper drainage.
4. If necessary, trim the bottom of the affected tube to relieve the pressure on the drain pan. Ensure the tube remains securely connected to the drain pan after trimming.

5. TOOLS AND MATERIALS NEEDED

Ensure that the following tools and supplies are on hand before starting the installation:

- Power drill (and hammer drill, if necessary) with assorted bits, paddle bits, and hole saws.
- Screwdriver set (for hand tightening components).
- Impact driver with assorted driver bits.
- Fastener tool.
- At least four 1/4" (6 mm) load-bearing wall anchors, each capable of supporting at least 50 lbs (22.7 kg) and removable without damaging the wall.
- Level (preferably a digital level).
- Silicon sealant with applicator (for sealing around external wall penetrations).
- UL-compliant air sealing tape and/or HVAC mastic or sealant (for airtight sealing of ducts and penetrations, as required by code).
- Wiring tools.
- Insulated foam board panels (for PTAC replacement with the AIO® Wall Mounted unit).
- PVC piping (required for external drain installations, long enough to extend beyond the exterior wall at the installation site).
- Mirror (for visual inspection behind the unit).
- Printed template for mounting the bracket. See Section 6.1 for more information.

6. SITE PREPARATION

The AIO® Wall Mounted unit includes the following components:

- AIO® unit
- Two anti-lift brackets are pre-installed on the unit to assist in balancing and prevent unwanted movement (see Fastening the anti-lift brackets).
- Wall-wall bracket to secure the unit to the wall (see Affixing the Wall Bracket to the Wall).

6.1 Pre-installation checklist

Before installing the AIO® unit, review the following checklist. Make sure that all of the listed items are true.

- ☐ Verify that the voltage used for the unit is within the acceptable range listed in the Product Data Sheet for the unit and that one of the following electrical setups is in place at the installation location:
  - A grounded power outlet with the correct rating, located within reach of the unit's power cord.
  - The wall is prepared for in-wall hardwiring, with access aligned to the electrical connection on the unit.
- ☐ Use only approved louvers for external venting. Using any grille or louver assembly other than those approved may cause the unit to overheat and result in a fire. It can also lead to water damage and/or performance issues and will void the warranty. See Approved Louvers for louver specifications.
- ☐ Download and print the correct template for the louver you are using. Some louver assemblies require holes in slightly different places to accommodate the design. You can access templates by visiting innova.co/templates. If you need help finding the correct template, contact your distributor or INNOVA.
- ☐ Ensure that the installation location provides sufficient clearance around the unit. For specific clearance requirements, see the Clearances section.

- [ ] Confirm that the wall at the installation location can support the weight of the AIO® Wall Mounted unit. The wall must meet at least one of the following conditions:
  - It contains internal studs, allowing at least two wall anchors to be fixed to them.
  - It is constructed of a solid load-bearing material (such as concrete or masonry) capable of supporting the unit's full weight, with appropriate anchors.

To check for stud locations:

Position the mounting template on the wall and check whether studs are located behind the holes marked A on the template, where the bracket will be attached.

- [ ] Check if there is a drain hole in the wall aligned with the drain marking on the template (marked **D**). If there is not, ensure that drilling a drain hole in the correct location through the wall is safe.
- [ ] Ensure that all clearance requirements are followed.

- Before installation, remove all panels and visible covers and verify that all components are present and undamaged.
- Take clear photographs of the unit with panels removed and submit them to the designated sales representative for verification before installation.
- Failure to document the unit condition and components before installation may affect warranty claims.

⚠CAUTION

- Do not use impact drivers or power impact screwdrivers when installing or fastening components of the unit. All screws must be hand-tightened using appropriate manual tools. Over-torquing fasteners may damage panels, brackets, or threaded components.
- Where practical, avoid installing the unit in direct sunlight. Solar heating may cause the room-air temperature sensor to provide
- inaccurate readings, resulting in improper unit operation.

6.2 Minimum clearance requirements

The AIO® Wall Mounted unit's clearance requirements depend on how the unit is mounted. The following criteria detail the required clearances:

Figure 4. Clearances

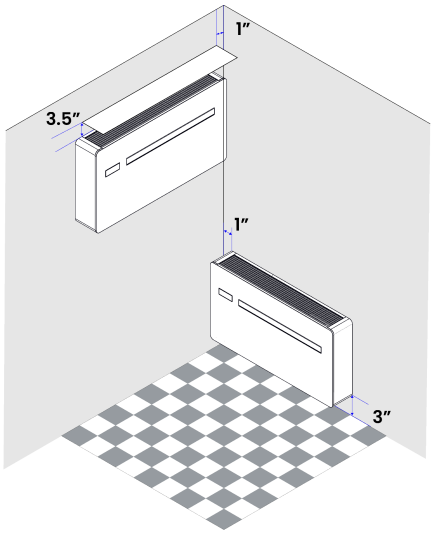

- **Top Clearance**
  A minimum of 3½" (89 mm) clearance is required between the unit and any surface above it, including the ceiling or a shelf. Space is needed for the return airflow. However, to ease cleaning the filter and servicing the unit, 8" (203 mm) of clearance is recommended.
- **Bottom Clearance**
  A minimum of 3" (76 mm) clearance is required between the unit and the floor to:
  - Prevent any vibration noise from the unit.
  - Allow the floor under the unit to be cleaned.
  - Allow for proper drain maintenance.
  - Avoid compressing the condensate line.

If installing a nebulizer below the unit, a total clearance of 8" (203 mm) is required.

- **Side Clearances**
  The AIO® Wall Mounted unit must not come into contact with any surfaces on either side, as it produces slight vibrations during operation. To prevent vibration-related noise, a minimum clearance of 1" (25 mm) is required on each side. However, for ease of installation and removal, a clearance of 2½" (64 mm) on either side is recommended.
- **Front Clearance**
  A minimum of 30" (762 mm) of unobstructed space is required in front of the AIO® unit to ensure proper airflow. Because the supply air vent is located on the front panel, any obstruction can inhibit performance and reduce efficiency. Be sure to keep the area clear of curtains, furniture, plants, or any other objects that could block the airflow.

- **Rear Clearance**
  The rear of the unit must be installed flush against the wall, with no gaps between the unit and the wall surface. Any gap can allow unconditioned air to enter the unit, potentially causing short cycling, reduced efficiency, and improper humidity control. Any plenums, adapters, or similar transition components must be sized to maintain the required airflow.
- **Exterior Clearance**
  A minimum of 36" (914 mm) clearance is required in front of the exterior louvers on the outside of the building. This ensures proper airflow through the louvers.

⚠CAUTION

- All external louvers must be designed to prevent rainwater intrusion into the unit.
- Louvers shall include integrated drainage provisions or be installed in a manner that ensures any water entering the louver assembly is safely drained away from the unit.
- Failure to provide proper rain protection and drainage may result in water ingress, equipment damage, or voiding of warranty coverage.

7. INSTALLING THE AIO® WALL MOUNTED UNIT

To install the AIO® Wall Mounted unit:

1. Affix the template to the wall.
2. Affix the wall bracket to the wall.
3. Prepare the vents.
4. Attach the exterior louvers.
5. Prepare a condensate drain.
6. Prepare the electrical connection.
7. Mount the AIO® unit on the wall bracket.
8. Fasten the Anti-Lift Bracket.
9. Check for air leaks.
10. Connect the unit to the building's power supply.
11. Connect the unit to the condensate drain.
12. Follow condensate drain protection and maintenance instructions.
13. Configure the AIO® Wall Mounted unit.
14. Test the unit.
15. Certify the installation.

7.1 Affixing the template to the wall

Before beginning the installation, affix the appropriate template to the wall to mark the correct placement for the wall bracket and vent holes.

For some louver assemblies, it is necessary to drill holes in different locations.

To download the template as a PDF, click the link below:

AIO Wall Mounted (Gen 3) Mounting Template (V...

To affix the template:

1. **Verify that you have downloaded and printed the correct template.**
   If you are unsure whether you have the correct template, please contact your distributor or INNOVA.
2. **Tape the template to the wall.**
   a. Position the template in the exact location where the unit will be installed.
   b. Using a spirit level, ensure the template has a 1.25-2% downward slope towards the right.
      - A digital level is recommended for greater accuracy.
      - If using a spirit level, confirm the bubble is slightly off-center to the left. Use a ruler to verify that the total slope does not exceed 3/4" (20 mm).
   c. Use painter's tape to affix the template to the wall.

The mounting template must be sloped 1.25–2% toward the right side. This reference mark determines the slope of the entire installation. An incorrectly sloped template will result in an incorrectly sloped unit, which may cause water leakage, especially in humid conditions.

7.2 Affixing the bracket to the wall and preparing the anti-lift brackets

The wall bracket supports the full weight of the AIO® Wall Mounted unit.

> **⚠ WARNING**
>
> The AIO® Wall Mounted unit must be securely installed to ensure both safety and proper operation.

To install the wall bracket:

1. **Position the bracket:**
   a. Align the wall bracket with the mounting template.
   b. Use the markings at the top right of the template to position the bracket correctly.
   c. Confirm that the holes on the wall bracket align precisely with the corresponding hole markings on the template.
2. **Select a mounting method:**
   There are two approved methods for securing the wall bracket:
   - Stud and Anchor Combination Method (Recommended)
   - Full Anchor Method

To secure the bracket using the Stud and Anchor Combination Method:

a. Attach one side:
- Secure one side of the bracket to a wall stud.
- Using a spirit level, verify that the bracket is aligned with the slope of the template before proceeding.

b. Attach the other side:
- Secure the second side of the bracket to another wall stud.
- Confirm that the bracket remains properly aligned with the template.

c. Secure the bracket to the wall:
Use all anchor locations to secure the mounting bracket to the wall:
- At least two wall studs must be penetrated by bracket anchors.
- Use load-bearing wall anchors with ¼" screws that support at least 50 lbs (22.7 kg) and can be removed cleanly from the wall.

d. Make sure the bracket is securely fastened to the wall with no visible gaps.

To secure the bracket using the Full Anchor Method:

> **⚠ WARNING**
>
> When using the Full Anchor method, always ensure the anchors can fully support the weight of the unit.

a. Secure all holes with load-bearing anchors.
- Use ¼" (6 mm) load-bearing wall anchors, rated for 50 lbs (22.7 kg) or more as needed for the specific installation, and easily removable from the wall.
- Using a level, verify that the bracket is aligned with the slope of the template before proceeding.
- Confirm that the bracket remains properly aligned with the template.
- The two outermost holes on the wall bracket must be used. Screwing these down prevents the bracket from shifting.

b. Make sure the bracket is securely fastened to the wall with no visible gaps.

> **⚠ CAUTION**
>
> - Do not use butterfly anchors, as these cannot be removed cleanly and may damage the wall surface.
> - The two outermost holes on the wall bracket must always be used to prevent lateral shifting of the bracket.
> - The wall surface must be flat, plumb, and level to allow the unit to be flush with the wall. If the wall is uneven or irregular, the unit cannot be properly installed.

3. **Verify level and tightness**
   a. Ensure the bracket is flush with the wall and does not flex or shift.
   b. Double-check that the bracket is aligned with the template. Use a digital level if available. If using a torpedo/contractor level, the outer edge of the bubble will touch the ¼" pitch line on the left side.



Before securing the bracket permanently, confirm it still matches the template's downward slope towards the right. An incorrectly sloped installation may cause water leakage, especially in humid conditions. INNOVA will not certify an installation with an incorrect slope, and uncertified installations void the warranty.

4. **Seal the bracket.**
   Apply a continuous bead of silicone sealant around the outer edge of the bracket where it meets the wall.
5. **Install the anchors for the Anti-Lifting bracket.**
   Select four anti-lift bracket mounting locations on the template. If possible, select locations with studs. If attaching to studs is not feasible, install ¼" (6 mm) load-bearing wall anchors suitable for the wall. Mark the studs and properly install the anchors.

7.3 Preparing the vents

To prepare the vents:

1. **Make vent holes.**
2. **Install vent sleeves (if not integrated with louver).**

> **⚠ WARNING**
>
> Before drilling any vent holes, verify that there is no electrical wiring in the path of the boreholes. Drilling into live electrical wiring can result in **death, serious injury, and/or property damage.**

To drill the vent holes:

1. **Inspect the borehole path to ensure it does not intersect with any of the following:**
   - Live electrical wiring.
   - Load-bearing structural components.
   - Exterior architectural features that may be damaged or obstructed.
2. **Select the appropriate drilling equipment based on the wall material.**
3. **Choose the correct borehole diameter—8" (203 mm)**, in accordance with the standard for all Gen 3 Wall Mounted units.
4. **Align the drill with the hole locations** as indicated on the template. Double-check positioning before drilling.
5. **Drill the boreholes with a slight downward pitch (2°-4°) toward the exterior.**
   This helps prevent water from entering the unit through the vent openings.

> Although the downward pitch reduces the risk of water intrusion, INNOVA does not guarantee complete protection under extreme conditions, such as hurricanes.

To install the vent sleeves:

1. **Insert the vent sleeves into the boreholes if they are not already integrated with the selected louver or vent assembly.**
   Refer to the sleeve manufacturer's instructions for proper fit and alignment.
2. **Ensure the sleeve edges are flush with the interior wall surface or wall bracket.**
   Use silicone sealant to fill any visible gaps between the sleeve and the borehole.
3. **Seal all around the sleeves to eliminate any air gaps.**
   Seal both the inside and outside edges with a bead of silicone to ensure no leakage. All seams and gaps should be sealed for water and air.

> **⚠ CAUTION**
>
> If the vent sleeves are not properly sealed, the unit's fan may draw in insulation or air from the exhaust, potentially causing performance issues or damage.

7.4 Attaching exterior louvers or other venting solutions

This section defines the exterior louvers approved for use with the AIO® Wall Mounted unit, outlines the performance and application criteria for louver selection, and provides installation requirements to ensure proper airflow, weather protection, and code compliance.

> **⚠ WARNING**
>
> Using any louver that does not follow the requirements in this section may cause fire, leaks, or unit failure, and will void the warranty.

While many venting systems, including those using louvers or grilles, can be designed to work with the AIO® Wall Mounted Unit, only certain models have been tested and approved to ensure compatibility and performance.

7.4.1 Approved louvers

The following louvers are approved for use with the AIO® Wall Mounted Unit:

- Sunvent
  - LLA/F 8W
  - LLA/C 8W
  - LLA/S 8W
- Thermaduct
  - RLA8

If not using one of the INNOVA-approved louver solutions, contact INNOVA to ensure that the louver solution being used matches the requirements of the AIO® Wall Mounted Unit.

7.4.2 Installing the exterior louvers

To install the exterior louvers:

1. **Make sure that there are no obstacles in front of the louver installation.**
   - Maintain a minimum of 36" (914 mm) of free space in front of the louvers. Follow stricter code if local rules differ.
   - Ensure that there is a minimum of 84" (2134 mm) clearance in all directions between the louvers and any other external exhaust sources, such as kitchen hoods, bathroom vents, dryer exhausts, etc. If local mechanical and building codes require a greater distance than 84" (2134 mm), the stricter standard applies.
2. **Install the louvers.**
   Follow the manufacturer's installation instructions.
3. **Seal the louver installation.**
   - Provide continuous flashing and weatherproof sealing at all exterior penetrations and connections to prevent moisture intrusion and protect the building from water-related damage.
   - Seal the louver sleeve tightly to the wallboard that is inside the room. Failure to do so may cause the unit's fan to suck insulation or other foreign material into the unit, causing damage.

⚠CAUTION

Ensure that the louvers and flashing are installed according to the manufacturer's specifications and properly sealed to prevent water damage.

7.5 Preparing a condensate drain

⚠CAUTION

- For installations in regions subject to **freezing winter conditions**, drain line piping must strictly adhere to the following pitch (slope) requirements to prevent ice blockages, water backup, and potential property damage:
  - **Direct Outdoor Drainage:** Any drain line routing directly to the outside environment **MUST maintain a minimum 30% pitch (approximately 3.6 in. per 12 in. / 300 mm per 1 meter)**. This steep slope ensures rapid, complete water evacuation before freezing can occur within the pipe.
  - **Internal Riser Drainage:** Drain lines routed into an internal building riser **MUST maintain a standard minimum pitch of 2% (approximately ¼ in. per 12 in. / 20 mm per 1 meter)**.
- Do not allow sags, traps, kinks, or low points where water can collect and freeze.
- The installer must verify proper condensate drainage during commissioning before operating the unit.
- Failure to follow these pitching guidelines in freezing environments will void the warranty for water damage caused by frozen or blocked drain lines.

This section provides information about condensate drain options and how to prepare a condensate drain for the AIO® Wall Mounted unit.

7.5.1 Condensate drain options

The AIO® Wall Mounted unit features an integrated condensate management system. This system includes a pump and a misting head that disperses condensate onto the outdoor heat exchanger coil while cooling. The misting process helps cool the coils, which makes the unit run more efficiently and eliminates the need for a traditional drain under these conditions.

However, in heating mode—or during cooling in low ambient temperatures (below 64.5°F / 18°C)—this disbursement system does not function effectively. In these scenarios, a dedicated condensate drain is required.

The unit includes a rubber drain hose at the bottom. This hose must connect to an appropriate drainage system, which can be one of the following:

- **In-the-wall drain (recommended)**
  In this setup, the rubber hose connects to a drainpipe hidden inside the wall. The drainpipe carries the condensate to a code-compliant disposal method, including but not limited to floor drains, laundry drains, or indirect waste.
- **Nebulizer**
  In this setup, the optional External Nebulizer Kit manages condensate from the unit's drain pan. It collects condensate water, vaporizes it through a nozzle with an integrated heater, and discharges it safely outdoors through a heated tube.
- **Direct exterior drain**
  In this configuration, the system conveys condensate directly to the exterior using the condensate hose or an extended drain pipe or hose, in accordance with applicable codes and drainage best practices.

⚠CAUTION

Using exterior drains should be a last resort due to the following hazards:

- In winter, discharged water can freeze, causing slipping hazards.
- In warmer months, standing water may encourage algae growth, which can also create slippery surfaces.

Installation requirements:

- The drainage relies on gravity only. For this reason, the unit-supplied rubber drain hose must slope downward at least ¼" per foot (2%) along its entire length. If there is a need to extend the factory-supplied draintube, make sure to use PVC code-complying pipe with a minimum diameter of ¾" (19 mm) and a downward slope of at least at least ¼" per foot (2%). Use the nebulizer accessory instead if the minimum slope cannot be met (minimum 30% pitch for locations that may experience freezing conditions).
- Pipes running in or along exterior walls must be wrapped with self-regulating heat tape and insulated to prevent freezing.



Avoid connecting the main drain hose to a barbed fitting. Instead, run it directly into a ¾" (19 mm) PVC pipe for optimal performance and fewer connection issues. Ensure the hose is long enough to insert at least 4" (102 mm) of the hose into the pipe.

⚠CAUTION

Any portion of the condensate drain hose that may be exposed to warm, humid air should be insulated with closed-cell, vapor-impermeable insulation to prevent surface condensation. Uninsulated drain tubes may experience condensation due to the temperature differential between cold condensate and ambient room air, resulting in dripping water that can damage interior finishes and flooring.

To prepare an in-the-wall drain:

1. **Install a drainpipe in the wall.**
   - Employ a qualified plumber.
   - The drainpipe must have a minimum inner diameter of ¾" (19.1 mm).
   - The drainpipe must be topped with a 45° fitting.
   - The opening of the 45° fitting must line up with the external condensate hole (marked **D**) on the template.
   - If the drainpipe is routed via an external wall, wrap it in insulation and heat tape to prevent freezing in locations that may experience freezing conditions.

⚠WARNING

Only use self-regulating heat tape or heat tape designed for use under insulation. Use of other types of heat tape may cause a fire and could void the warranty.

2. **Test the drain.**
   - Pour water into the drainpipe.
   - Check for leaks.

To prepare an external drain:

1. **Drill a drain hole.**
   a. Bore a drain hole through the exterior wall. The drain hole must have a downward slope toward the exterior of at least ¼ inch per foot.
   b. Ensure that the drain hole and assembly allow for a downward slope of at least ¼ inch per foot from the condensate drain under the AIO® Wall Mounted unit.
   c. Additional drain protection can be provided by inserting a drain pipe into the drain hole and using it as a sleeve for the drain hose.
2. **Insert the rubber drain hose through the drain hole or pipe.**
3. **Test the drain.**
   a. Pour water into the drain pipe.
   b. Check for leaks.

7.6 Preparing the electrical connection at the unit

The AIO® Wall Mounted unit can be connected to the building's main power supply in one of two ways:

- Using the Leakage Current Detection Interrupter (LCDI) power cord.
- Hardwiring the unit directly to the building's main power supply using the Quick connect whip cord or making a direct hardwired connection to the unit.

⚠WARNING

Only a qualified electrician may prepare the electrical connection.

⚠WARNING

To prevent electrical shock, fire, or serious injury:

- An electrician must install a dedicated circuit breaker for all connection types (LCDI or hardwired).
- For hardwired installations, an emergency disconnect switch is also required:
  - Use a double-pole disconnect for 230V units.
  - Use a single-pole disconnect for 115V units that disconnects only the hot wire.

⚠CAUTION

To avoid damage from voltage spikes or power surges, the unit must be connected to a dedicated surge protector or a building-wide surge protection system.

Failure to use surge protection can result in equipment failure and may void the warranty.



Do not connect the unit to a Ground-Fault Circuit Interrupter (GFCI) because normal unit operation may cause it to trip unnecessarily. Consult local code or INNOVA support for more information.

7.6.1 LCDI power cord connection

An LCDI power cord may be purchased to use with the AIO® Wall Mounted unit. In this case, the AIO® Wall Mounted unit can be connected to the power supply by plugging the cord into a properly sized, grounded electrical outlet.

The outlet must match the LCDI power plug on the cord and be within reach of the power cord. For connection directions, see Section 7.10.

Figure 5. Plug definitions

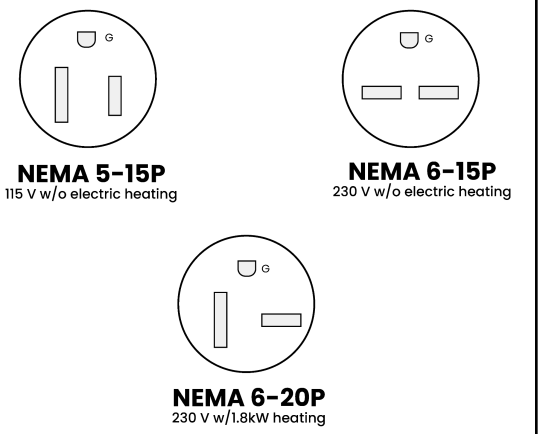

Note that the electrical outlet must be close enough to the unit so that the LCDI cord can reach it from its connection point at the bottom right of the unit. The cord must not pass directly behind the unit or the unit will not be flush against the wall.

⚠ WARNING

- Do not alter the LCDI power cord or plug.
- Do not use an extension cord to connect the LCDI power cord to an outlet.

7.6.2 Pre-connection checklist

Before connecting the LCDI power cord to the power outlet, check that:

- ☐ The power supply voltage and frequency comply with the data plate on the AIO® Wall Mounted unit.
- ☐ The power outlet is a grounded connection and is rated for the maximum wattage indicated on the data plate of the AIO® Wall Mounted unit.
- ☐ Power is supplied only through a power outlet compatible with the LCDI power cord's plug.
    1. The power supply has suitable protection against overloads and/or short circuits. Use a time-delay fuse or an equivalent device rated for the appropriate current.

Figure 6. External connections

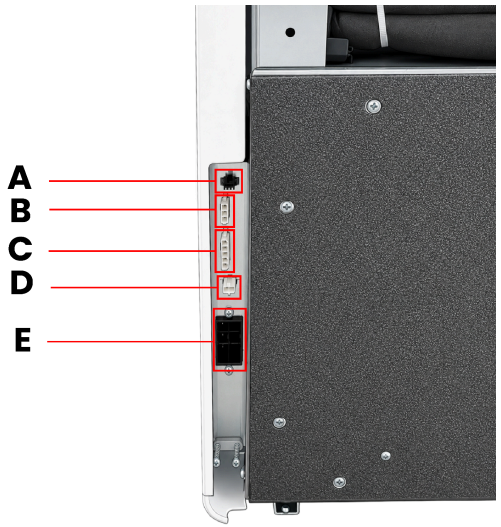

A	ERV communication	D	Power for heat trace on condensate line/Nebulizer
B	Power for ERV/Nebulizer	E	Quick connect line power
C	ECM axial condenser/outdoor fan power (not used for this unit)		

7.6.3 Quick connect hardwired and direct hardwired connection

The AIO® Wall Mounted unit can be hardwired directly to a correctly sized, dedicated circuit breaker. The AIO® Wall Mounted unit can be hardwired using a direct connection or a Quick connect whip cord, available for purchase from INNOVA.

All connections must be made in accordance with the National Electrical Code and any local code with jurisdiction. Only qualified electricians may perform this installation.

To prepare a hardwired connection:

1. **Mount a junction box behind the unit**
    a. For a direct connection, install the junction box at the location marked **H** on the mounting template.
    b. For a connection using a Quick connect whip cord, install the junction box near the lower right corner of the unit.
    c. A junction box provides a protected enclosure for electrical connections and is required by some electrical codes.
    d. Follow all applicable codes regarding flush, surface, or recessed mounting of boxes.

Note that the junction box must be close enough to the unit so that the 60" Quick connect cord can reach it from its connection point from the bottom right of the unit. The cord must not pass directly behind the unit or the unit will not be flush against the wall.

2. **Wire the junction box**
    a. Verify that the power to the breaker is off.
    b. Route the electrical wire from the breaker box to the junction box. Make sure that the wire is rated for the load.
    c. Terminate the wires within the junction box using listed connectors and install a cover to maintain enclosure integrity. If wiring directly to the unit, make sure there is enough cable to reach the unit's electrical panel.

7.7 Mounting the unit on the wall bracket

Mount the unit on the wall bracket after checking that the bracket is securely anchored to the wall, has a 1.25-2% slope down towards the right, and that all necessary electrical connections and condensate drain preparations are complete.

To mount the AIO® Wall Mounted unit onto the wall bracket:

1. Lift the AIO® Wall Mounted unit and clip it to the prongs on the wall bracket.

To ease placement, tilt the bottom of the unit slightly away from the wall.

2. Check that the unit is level.
    - It is recommended to use a digital level.
    - The unit should be level with a slight 1.25~2% slope to the right, or ¼" per foot.

⚠CAUTION

- All mounting bracket holes provided by the manufacturer must be secured with appropriate fasteners. Do not leave any bracket holes unused.
- Failure to fully secure all mounting points may result in vibration, noise, improper support, or detachment of the unit.

7.8 Fastening the anti-lift brackets

Two anti-lift brackets are provided to secure the AIO® Wall Mounted Unit in place during installation and operation. The installation location of the anti-lift brackets is marked **E** on the mounting template.

⚠WARNING

- Verify that the brackets are fastened as instructed.
- Failure to properly secure the anti-lift brackets may result in the unit detaching from the wall bracket, causing serious injury or property damage.

To fasten the anti-lift bracket to the wall:

1. **Position the anti-lift bracket over the template.**
    - Ensure the brackets align with the marked studs or anchors installed in Section 6.2.
2. **Secure the anti-lift bracket to the wall.**
    - Use the same ¼" (6 mm) anchors for the anti-lift brackets as were used for the mounting brackets.

7.9 Checking for air leakage

Many walls are not perfectly straight. This can create a gap between the vent sleeves and the rear of the AIO® Wall Mounted unit.

After mounting the AIO® Wall Mounted unit on the wall bracket and fastening the anti-lift bracket, check that the unit is tightly up against the wall on all sides.

To check for air leakage:

1. Ensure the unit is securely attached to the wall bracket.
2. **Darken the room.**
    - Close the curtains in the room.
    - If there are no curtains, use opaque material to cover the windows.
    - Turn off the lights in the room.
3. **Check for air gaps between the unit and the wall.**
    - Inspect the area where the AIO® Wall Mounted unit meets the wall.
    - Check all sides to see if there is any light infiltration. Use a mirror to detect light from behind the unit.
    - If there are no gaps, there should be no light infiltration.
4. **To eliminate air gaps:**
    a. Lift the unit off the wall bracket and set it aside.
    b. Build up the area around the vent openings. Use closed-cell foam tape of appropriate thickness.
    c. Ensure that:
        - No air can move between the intake and the exhaust.
        - Outside air cannot infiltrate the room.
        - Exhaust air cannot leak back into the room.

7.10 Connecting the unit to the building's power supply



- An INNOVA-supplied LCDI or whip cord is recommended.
- If wiring other than the supplied cable is used to connect the AIO® Wall Mounted unit to the junction box, verify that the wire gauge is appropriate for the voltage, amperage, and cable length, and that the installation complies with all applicable codes.
- All electrical connections must be performed by a qualified electrician and rated for the appropriate voltage and amperage.

The unit can be connected to the building's main power supply using an LCDI power cord or a hardwired connection.

To connect the unit with an LCDI power cord:

1. Plug one end of the LCDI power cord into the power connector on the bottom-right side of the unit.
2. Plug the LCDI power cord into the power outlet prepared for the unit.
3. Secure all wiring.

7.10.1 Connecting the unit with a hardwire

A Quick connect whip cord can be purchased to connect the unit to the power supply or a power cable can be created by following NEC guidelines.

To connect the unit using a Quick connect whip cord:

1. Verify that power to the breaker is off.
2. Insert the male connector on the whip cord into the female connector on the unit's power terminal on the bottom right side of the unit.
3. Connect the wires on the other end of the cable to the junction box.
   - For 115V units:
     - Connect the black wire to the hot.
     - Connect the white wire to neutral.
     - Connect the green wire to ground.

Figure 7. 115V unit cord detail

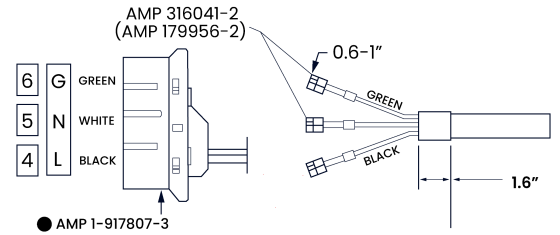

   - For 230V units:
     - Connect the black and white wires to Line 1 and Line 2
     - Connect the green wire to ground.

Figure 8. 230V unit cord detail

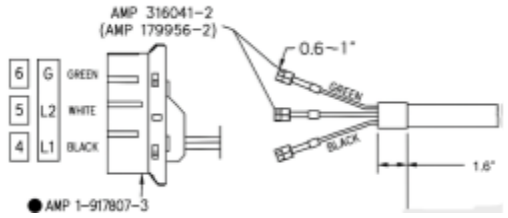

To make a direct hardwired connection:

1. Disconnect power at the main fuse or breaker panel.
2. Remove the return air grille.
3. Remove the front panel by following the steps below:

⚠CAUTION

When removing the front cover panel of the AIO® Wall Mounted (Gen 3) unit:

- The Onboard Touch Controller is clipped to the back of the front cover panel, and a wire harness connector is soldered directly on the back of the controller.
- Do not pull the panel abruptly, because this can tear the connector from the Onboard Touch Controller, causing damage.
- Carefully disconnect the wire harness connector before fully removing the front cover panel to prevent damage to the connector or the Onboard Touch Controller.

   i. Remove the two front screws securing the front panel on the top of the unit (circled in red in Figure 9).

Figure 9. Front screws on the top of the unit

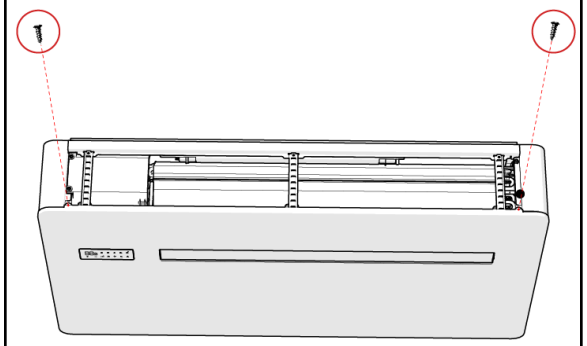

   ii. Tilt the panel slightly forward.
   iii. Disconnect the display panel cable from the unit.
   iv. Lift the front panel slightly and remove it.
4. Remove the two upper screws securing the left side panel. Lift the panel slightly and remove it.
5. Remove the two front screws securing the electrical cover, and remove the cover.
6. Disconnect the power cord from the lower terminal by loosening the three screws from the terminal block.
7. Cut and cap the existing wires and wrap the ends with electrical tape.
8. Connect the new power cable to the terminal.

To hardwire the unit without using a Quick connect whip cord:

Watch the following video:

AIO Wall Mounted (Gen 2+) Hardwire Instructions...

7.11 Connecting the condensate drain

Perform this procedure only after the unit is mounted on the wall bracket.

This section provides information about connecting the AIO® Wall Mounted unit to the prepared condensate drain.

To connect the rubber hose to an in-the-wall drain:

1. **Prepare the rubber hose.**
   Cut the end of the rubber hose as needed, but make sure there is enough left that at least 4" (102 mm) of the hose can be inserted into the pipe.
2. **Connect the rubber hose to the drainpipe.**
   - Gently push at least 4" (102 mm) of the rubber hose into the drainpipe.
   - Be careful not to squeeze, crimp, or kink the rubber hose.
   - Ensure that the rubber hose fits securely in the drainpipe and cannot pop out or come loose.
3. **Insulate the rubber hose.**
   - Wrap the part of the rubber hose in the room with anti-condensation insulating material.

To connect the rubber hose to an external drain:

1. **Insert the rubber hose into the drain hole or pipe.**
   - Gently push at least 4" (102 mm) of the rubber hose into the drain hole.
   - Be careful not to squeeze, crimp, or kink the rubber hose.
   - Ensure that the rubber hose fits securely in the hole or pipe and cannot pop out.
2. **Seal the connection.**
   - Seal the area around the rubber hose to prevent air and water leakage from the drain hole into the room.
   - Follow best practices based on the application and materials used.
3. **Insulate the rubber hose.**
   - Wrap the part of the rubber hose in the room with anti-condensation insulating material.
4. **Insulate any external piping.**
   - If the drain is extended with any exterior piping, wrap all the pipes with heat tape and insulation.

Figure 10. Condensate drain

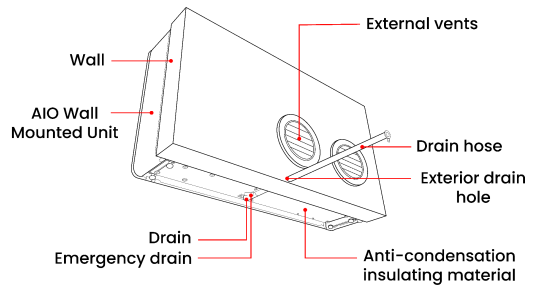

⚠CAUTION

- All external condensate drain lines must be properly installed and routed in accordance with applicable plumbing codes.
- In cold climate installations where freezing temperatures may occur, external drain lines must be equipped with approved heat tape or equivalent freeze-protection measures. Heat tape installation must comply with all applicable local electrical codes.
- Failure to provide proper freeze protection may result in drain blockage, water damage, or equipment malfunction.
- In installations where ambient temperatures may fall below freezing (32°F / 0°C), external condensate drain piping must be equipped with approved heat trace cable to prevent freezing and blockage.

⚠WARNING

Only use self-regulating heat tape or heat tape designed for use under insulation. Use of other types of heat tape may cause a fire and could void the warranty.

7.12 Condensate drain protection and maintenance

To reduce the risk of bacterial biofilm formation and maintain effective drainage, apply a coil-safe drain line cleaner (such as Valterra PowerMax) to all drain line components during installation. This helps inhibit early microbial growth within the system.

For ongoing maintenance, clean all condensate drain-line components, including drain pans, collection boxes, pumps, and associated tubing, at least once every 6 months. In more demanding environments, more frequent cleaning may be necessary.

Always use coil-safe cleaning products to protect system components and ensure long-term performance.

Approved drain pan cleaning products include Nu-Calgon PowerZyme and Viper Pan & Drain Treatment, or equivalent coil-safe formulations.

7.13 Powering on the unit for the first time

Before powering on the unit, confirm that:

- ☐ The installer has been trained by INNOVA.
- ☐ The unit remained de-energized until all installation checks were completed.
- ☐ The mounting bracket and anti-lift brackets are secure.
- ☐ The unit has a 1.25-2% downward slope towards the right.
- ☐ The unit is flush against the wall (without any air gaps).
- ☐ The louvers used for the unit are either approved by INNOVA or fit the unit specifications.
- ☐ The wall vents are unobstructed.
- ☐ The unit has the required clearances.
- ☐ The condensate drain connections have been installed correctly.
- ☐ Confirm that the unit is connected to a permanent, properly grounded, dedicated power circuit, and receives the voltage specified on the unit rating plate.

To power on the unit for the first time:

1. Turn on the circuit breaker and/or connect the power supply cord.
2. Press the **Power key** (⏻) on the Onboard Touch Controller. The display will illuminate, and the unit will enter standby mode.
3. Verify that no error codes appear on the display. If an error code is displayed, refer to the Troubleshooting section of the Maintenance and Troubleshooting Guide before proceeding.

After the first power-on, the unit automatically enters a Wi-Fi provisioning window. If Wi-Fi is not configured within 15 minutes, provisioning mode automatically times out. Refer to Section 9.5 for Wi-Fi setup instructions.

8. SPECIALIZED INSTALLATION CONFIGURATIONS

The AIO® Wall Mounted unit may be physically configured for the following situations:

- When the unit is mounted high on a wall.
- When the unit is used with an occupancy sensor.
- When heating strip(s) must be manually removed.

To see accompanying user and installer menu configurations, refer to Startup and Unit Configuration.

8.1 Configuring the unit for a high wall installation

By default, the unit is configured for low-wall installation, with airflow directed upward. The unit performs better at both heating and cooling when installed near the floor. However, the AIO® Wall Mounted unit can also be installed in a high-wall application.

For a high-wall application, the airflow direction must be reversed by adjusting the supply air louver to blow downward rather than upward. This is achieved by modifying the louver bracket and changing the settings on the unit.

Additionally, an underbody cover plate (part GB0737II) should be installed to cover the unfinished bottom of the AIO® Wall Mounted unit.

⚠ WARNING

When the AIO® Wall Mounted unit is in the OFF position, voltage is still being supplied to the electrical controls. To avoid electric shock or damage to the AIO® Wall Mounted unit, disconnect the power to the unit before opening it by doing one of the following:

- Unplug the power supply cord from the power outlet, or
- Turn off the circuit breaker and/or remove the fuse.

To configure the AIO® Wall Mounted unit for high wall installation:

1. Change the louver bracket.
2. Program the louver direction.

8.1.1 Changing the louver bracket

1. Ensure that the AIO® Wall Mounted unit is disconnected from the power supply.
2. If the front cover of the unit is still attached, remove it. For step-by-step instructions on how to remove the front cover, follow the steps under To make a direct hardwired connection.
3. Remove the screws from the right side of the louver bracket.

Figure 11. Removing screws from the louver bracket

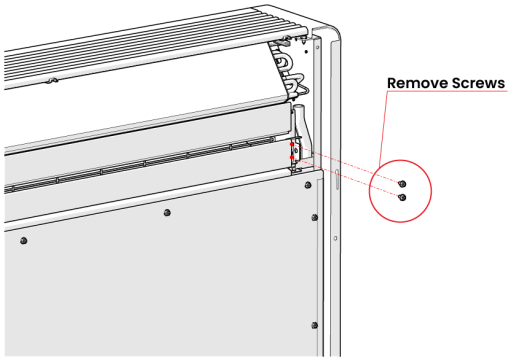

4. Rotate the right-side louver bracket 180 degrees.

Figure 12. Rotating the louver bracket

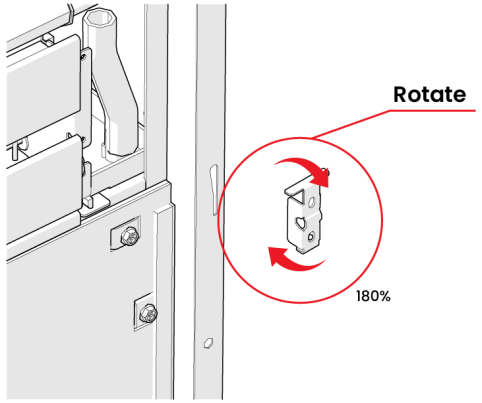

5. Reinstall the right-side louver support bracket screws.
6. Reinstall the front cover panel and grille.
7. Install the underbody cover plate (part GB0737II) on the bottom of the AIO® Wall Mounted unit.

For more information, see the documentation for the underbody cover plate.

In addition to the physical bracket change, the supply air direction must also be configured for the onboard touch controller. To configure the airflow direction, see Section 9.4.

8.2 Connecting a dry contact for remote on/off

The AIO® Wall Mounted unit supports integration with dry contact devices (voltage-free switch inputs used to control the unit's operation). These may include occupancy sensors, open-window switches, on/off remotes, or other compatible control systems. When used, these devices can automatically activate or deactivate the unit as needed.

When the dry contact opens, the unit enters standby mode and displays CP (Contact Present) on the screen.

To minimize electrical interference, use solid conductor wire for runs of up to 30 feet. For runs longer than 30 ft, use shielded solid four-conductor 18 AWG cable.

⚠ WARNING

- Turn off all electrical power before making any connections.
- All electrical connections and wiring MUST be installed by a qualified electrician and conform to the National Electrical Code and all applicable state and local codes.

To connect a dry contact:

1. **Turn off the power.**
   Make sure the power to the unit is off. Unplug the power cord or turn off the breaker. Then wait at least five minutes before continuing to ensure that all capacitors have discharged.
2. **Remove the air filter.**
   a. Lift the grille from the unit and set it aside.
   b. Gently pull up on the plastic around the filter, while taking care not to break the plastic frame or tear the filter.
3. **Remove the front cover panel.**
   For step-by-step instructions on how to remove the front cover, see Section 7.10.1 under "To make a direct hardwired connection".
4. **Remove the black plastic electrical protective cover.**
   a. Remove the two screws on the top left that hold the black plastic electrical protective cover in place on the frame.

Figure 13. Screws securing the electrical protective cover

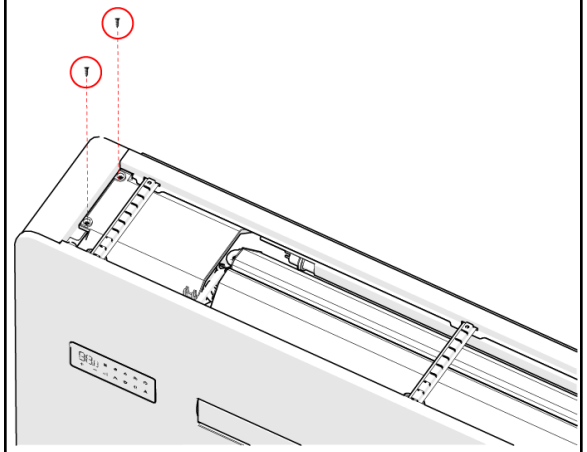

Keep the screws separate from the screws removed in the previous step.

   b. Remove the two lower screws securing the black plastic electrical protective cover to the unit, then remove the cover. The internal components of the unit are now visible.

5. **Connect the wires for the dry contact to the CP connections.**
   The following image shows the connection points.

Figure 14. CP connections

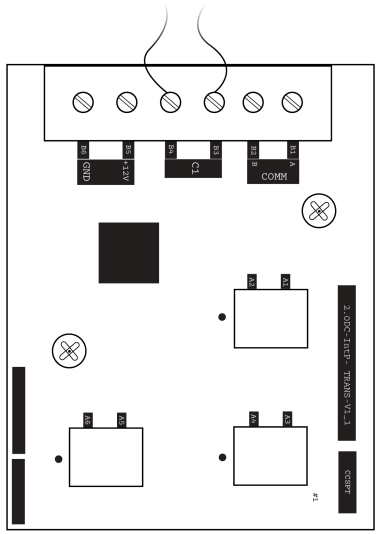

6. **Position the black plastic electrical protective cover in place.**
   Do not secure the cover with screws until the unit has been tested.
7. **Test that the dry contact works properly.**
   a. Power up the AIO® Wall Mounted unit.
   b. Activate and deactivate the connected dry contact device to verify that the unit responds correctly (turning on and entering standby mode as expected).
8. **Secure the plastic cover.**
   a. Reattach the black plastic electrical protective cover onto the unit using the two screws removed in Step 4a.
   b. Reattach the black plastic electrical protective cover to the white metal frame of the AIO® Wall Mounted unit using the two screws removed in Step 4b.
9. **Finish closing the unit.**
   a. Position the front cover panel on the AIO® Wall Mounted unit.
   b. Carefully reconnect the wire harness connector for the Onboard Touch Controller to the unit before fully attaching the front cover panel.
   c. Reattach the front cover panel to the AIO® Wall Mounted unit using the two screws removed in Step 3.
   d. Reinsert the air filter into the AIO® Wall Mounted unit.
   e. Reinsert the grille above the filter.

8.3 Configuring heat strip wattage

The AIO® Wall Mounted unit 230V with electric heat strips features two 900W resistance heating strips, which by default operate together (1800W) or individually (900W). If there is a requirement to operate the unit with reduced electric heat capacity (900W) or with electric heat disabled, this setup must be configured during installation or at initial startup.

For models with auxiliary electric heat, do not abruptly cut power to the unit, as this may cause internal overheating. Instead, use the CP contact to place the unit in standby mode, allowing it to run its cool-down ventilation cycle before shutting down completely.

⚠ WARNING

- Turn off all electrical power before making any connections.
- All electrical connections and wiring MUST be installed by a qualified electrician and conform to the National Electrical Code and all applicable state and local codes.

To configure the AIO® Wall Mounted unit heat strip wattage:

1. Change the heater's electrical connections
2. Configure the heater wattage
3. Label the configuration

To change the heater electrical connections, follow the instructions in Connecting a dry contact for remote on/off:

8.3.1 Changing the heater's electrical connections

For applications in which there is limited available electrical capacity, one 900W resistance heating strip can be permanently disabled by disconnecting Heater 3 and cutting the wires.

To permanently disable 900W operation:

1. Disconnect the Heater 3 connector for one heating strip from the PCB.

Figure 15. Heating strip connectors

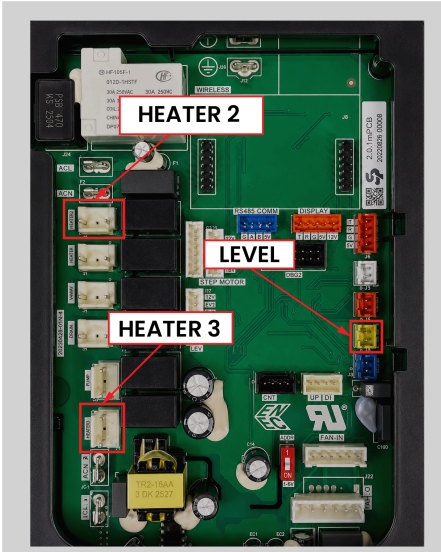

Figure 16. Heating control schematic diagram

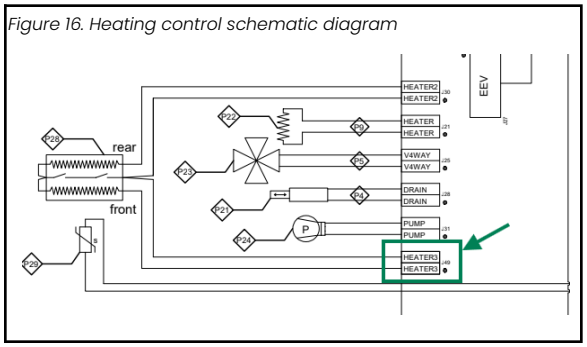

a. Cut off the plug from the disconnected wire to prevent reconnection.
b. Wrap wire ends with electrical tape or use a wire nut to insulate them. **Secure the plastic cover.**
c. Reattach the black plastic electrical protective cover onto the unit using the two screws removed in Step 4a.
d. Reattach the black plastic electrical protective cover to the white metal frame of the AIO® Wall Mounted unit using the two screws removed in Step 4b.

2. **Finish closing the unit.**
   a. Position the front cover panel on the AIO® Wall Mounted unit.
   b. Carefully reconnect the wire harness connector for the Onboard Touch Controller to the unit before fully attaching the front cover panel.
   c. Reattach the front cover panel to the AIO® Wall Mounted unit using the two screws removed in Step 3.
   d. Reinsert the air filter into the AIO® Wall Mounted unit.
   e. Reinsert the grille above the filter.

To configure the heater wattage for temporary 900W operation, see Section 9.4.

While the Heater 2 and Heater 3 ports on the PCB are for the electric heating strips, the Heater port — just below Heater 2 — is for a heat trace to the condensate pan. It should not be disconnected.

The 115 V unit comes equipped with only one heating strip for 900W connected to Heater 2.

8.3.2 Label the configuration

Changing the heater's electrical connections converts a 230V unit that typically uses 1800 W of electric heat to one that can only use 900 W of electric heat. To ensure that this is made clear to future service technicians, mark this on the label (located on the unit, near the rating plate).

Figure 17. Marking label for resistance heating configuration

Installer Responsibility	900W	1800W
Power supply (V/Ph/Hz)	230/1/60	230/1/60
Voltage range	180-253	180-253
Running Amps Cooling	3.4	3.4
Max Amps Cooling	7.8	7.8
Running Amps Heating	6.8	10.7

9. STARTUP AND UNIT CONFIGURATION

⚠WARNING

When the AIO® Wall Mounted unit is in the OFF state, voltage may still be present at the electrical controls. To avoid electric shock or damage to the unit, disconnect the power supply before opening or servicing the unit. Unplug the power supply cord from the outlet or turn off the circuit breaker and/or remove the fuse.

After the unit has been physically installed, electrically connected, and the installation checklist and self-certification procedures have been completed, the unit must be commissioned before it is ready for use. This chapter covers system verification, menu configuration, and Wi-Fi setup.

9.1 Onboard touch controller overview

The Onboard Touch Controller is located on the front panel of the unit. It consists of a segmented numeric display and a row of capacitive touch keys. All startup, commissioning, and configuration operations are performed through this controller.

The controller has the following touch keys:

Figure 18. Controller display

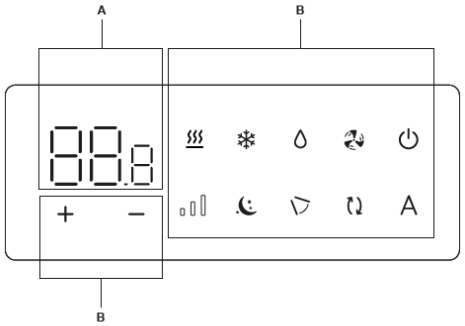

Table 3. Onboard Touch Controller keys

Key	Description
+ (Plus)	Increases setpoint temperature; scrolls upward through menu items
– (Minus)	Decreases setpoint temperature; scrolls down through menu items
Fan speed	Cycles through fan speed levels (for example: Low, Medium, High, Boost, and Auto)
Mode	Cycles through operating modes (Heating, Cooling, Dehumidification, Fan Only, and Auto)
Swing	Activates or deactivates the motorized air direction louver
Timer	Sets the auto-off timer
Night	Activates or deactivates Night mode
A (Auto / Alert)	Used for Auto temperature changeover, menu access, and displaying active alerts
Power	Turns the unit on or off; used for menu access and confirmation

The order and content of menu items may vary depending on the installed firmware (FW) version. Always verify the firmware version before making configuration changes.

9.2 Verifying system status (Diagnostic menu)

The Diagnostic menu allows the installer to verify the unit's firmware version and monitor real-time operating parameters. Use this menu to verify that all monitored components and operating parameters are functioning correctly after installation and startup.

9.2.1 Accessing the Diagnostic menu

1. With the display on, press and hold the + and A keys simultaneously for 10 seconds.
2. The display shows "VE" (firmware version), confirming that the Info & Commissioning menu is active.
3. Use the **+** and **–** keys to scroll through the available parameters.
4. To exit the menu, press and hold the **Power key** (⏻) for 10 seconds, or wait 30 seconds for automatic timeout.

9.2.2 Diagnostic menu parameters

Table 4. Diagnostic menu parameters

Parameter	Description	Options/Range
VE	Main firmware version	Read-only
Fi	Indoor fan speed (rpm = displayed value × 100)	Read-only
Fo	Outdoor fan speed (rpm = displayed value × 100)	Read-only
CO	Compressor operating frequency (Hz)	Read-only
ro	Room temperature (°C) (FW 1.15.1+)	Read-only
ou	Outdoor temperature (°C) (FW 1.15.1+)	Read-only
ic	Incoil (evaporator) temperature (°C) (FW 1.15.1+)	Read-only
oc	Outcoil (condenser) temperature (°C) (FW 1.15.1+)	Read-only
dc	Compressor discharge temperature (°C) (FW 1.15.1+)	Read-only
tU	Total unit running time – General (Days: Hours) (FW 1.15.1+)	Read-only
tH	Total unit running time – Heating (Days: Hours) (FW 1.15.1+)	Read-only
tC	Total unit running time – Cooling (Days: Hours) (FW 1.15.1+)	Read-only
tA	Total auxiliary heater running time (Days: Hours) (FW 1.15.1+)	Read-only

After installation, confirm that both fan speeds (Fi and Fo) report non-zero values while the unit is operating, and check that temperature readings (ro, ou) are reasonable for the current conditions.

9.3 Configuring the unit (User menu)

The User menu provides access to basic configuration parameters that may need to be adjusted during commissioning. These settings can also be changed by the end user after installation.

9.3.1 Accessing the User menu

1. With the display off, press and hold the **Power key** (⏻) for 10 seconds.
2. The unit turns on, and the display shows a flashing indicator.
3. Continue holding the **Power key** (⏻) until a menu code appears (e.g., CF or Ub), then release.
4. Use the **+** and **–** keys to scroll through menu items.
5. Press the **Power key** (⏻) to select the parameter and enter edit mode.
6. Use the **+** and **–** keys to change the value.
7. Press the **Power key** (⏻) again to confirm the change. The display briefly shows a confirmation indicator [ ] and then advances to the next menu item.
8. To exit the User menu, press the **A key** twice quickly, or wait 30 seconds for automatic timeout.

9.3.2 User menu parameters

Table 5. User menu parameters

Parameter	Description	Options/Range
Ub	Key tone volume	0 (off), 1 (low), 2 (medium), 3 (high, default)
uP	Wi-Fi / Bluetooth manual pairing mode	no (default), St (activate provisioning)
ur	Wi-Fi / Bluetooth module reset	no (default), cr (clear credentials), SF (soft reset), Hd (NOT AVAILABLE)
Ht	Auxiliary heater type (only models that include electric heat)	no (default), r1 (900 1 kW), r2 (1800 2 kW)
oH	Room temperature offset – Heating	-9 to 9 (-9° to +9° K)
oC	Room temperature offset – Cooling	-9 to 9 (-9° to +9° K)
CF	Temperature scale selection	°C (default) or °F

- If the Wi-Fi / Bluetooth module is reset, the unit will automatically enter Manual Pairing mode and therefore be ready for a new pairing.
- If the unit has been powered on for more than 15 minutes, the Wi-Fi provisioning window will have closed. To reactivate provisioning mode, navigate to the "uP" parameter in the User menu and set it to "St" before attempting Wi-Fi configuration.

9.4 Installer menu (advanced settings)

The Installer menu contains advanced configuration parameters intended for use by the installer during commissioning. These settings control the unit's operating mode, installation orientation, connectivity options, and accessory integration options.

9.4.1 Accessing the Installer menu

1. First, access the User menu (see Section 9.3).
2. From the User menu, press and hold the **+** and **–** keys simultaneously for 10 seconds.
3. The display will show an Installer menu parameter code (e.g., HC).
4. Use the **+** and **–** keys to scroll through menu items.
5. Press and hold the **Power key** (⏻) for 2 seconds to select an item and enter edit mode.
6. Use the **+** and **–** keys to change the value.
7. Press and hold the **Power key** (⏻) for 2 seconds to confirm the change.
8. To exit the Installer menu, press the **Power key** (⏻) for approximately 10 seconds (the display will show a flashing indicator), then press the **Power key** (⏻) again for another 10 seconds to turn off the display. Alternatively, wait 30 seconds for automatic timeout.

9.4.2 Installer menu parameters

Table 6. Installer menu parameters

Parameter	Description	Options/Range
HC	Heating / Cooling mode selection	hc (both, default), ho (heating only), co (cooling only)
ho	Hotel mode	no (default), ys (enabled)
in	Installation position (wall mounting height)	dn (low wall, default), uP (high wall)
Ad	Modbus address	1.....99 (default: 1)
rF	Remote function (M7 wall control - Canada Only)	no (default), ys (enabled)
co	Wi-Fi expansion module	ys (WIFI ON + RS485 ON), no (WIFI OFF + RS485 OFF), nr (WIFI OFF + RS485 ON)
HE	Auxiliary heater operating mode (ELEC models only)	rE (standard, default), rH (resistance-only heating), rT (resistance-only heating when outdoor temp is low)
Hr	ERV module (FW 1.15.1+)	no (default), ys (enabled, ERV models only)
Hn	ERV control logic (FW 1.15.1+)	no (2.0 mode, default), ys (PTAC mode)
Sn	SNCS system activation (Nebulizer) (FW 1.15.1+)	no (default), ys (enabled)
At	Condensate drainage from unit in cooling mode (FW 1.15.1+); no water is pumped from the drain pan onto the condenser coil when active	no (default - drain closed, condensate disbursement pump on), ys (drain open, condensate disbursement pump off)
HL	Hotel mode – Heating minimum setpoint (FW 1.3.0+)	61°C–88°F (16°F–31°C)
Hh	Hotel mode – Heating maximum setpoint (FW 1.3.0+)	61°C–88°F (16°F–31°C)
CL	Hotel mode – Cooling minimum setpoint (FW 1.3.0+)	61°C–88°F (16°F–31°C)
Ch	Hotel mode – Cooling maximum setpoint (FW 1.3.0+)	61°C–88°F (16°F–31°C)

Depending on the unit's factory configuration, some Installer menu parameters may already be set to non-default values.

Parameters may appear in a different order, or under different menus, than shown here.

- In Hotel mode, **ho** must be set to ys (enabled) for HL, Hh, CL, and Ch parameters to be usable.
- If Heating Only (**ho**) or Cooling Only (**co**) mode is enabled in the HC parameter, the disabled mode will not be available from the display or remote control. The Auto operating mode will also exclude the disabled mode.

9.4.3 Key installer configurations

High wall / Low wall installation (in): If the unit is mounted in a high wall position (see Section 8.1), set this parameter to uP. This automatically reverses the air deflector's operating direction and adjusts the heating temperature offset to -4°C (-7°F) to compensate for temperature stratification effects.

Hotel mode (ho): When enabled, the operating modes available to the end user are limited to Heating and Cooling. Fan speed adjustment is permitted, but the setpoint range is restricted. Heating setpoint is limited to 22°C to 28°C (72°F to 82°F), and Cooling setpoint is limited to 16°C to 24°C (61°F to 75°F) by default. These ranges can be adjusted using the HL, Hh, CL, and Ch parameters.

Wi-Fi expansion module (co): The Wi-Fi module should only be turned off if an external Modbus supervisor is connected and Wi-Fi communication is not used, or if a wired wall controller is installed.

Remote function (rF): Set to **ys** when a wired wall control is connected. When enabled, Fan Only and Dehumidification modes are disabled on the onboard controller, and room temperature sensing is transferred to the wired wall controller probe.

9.4.4 Heater wattage configuration procedure

1. Hold down the **Power key** (⏻) for 10 seconds. The display should show **CF**.
2. Press and hold both the + and - keys at the same time for 10 seconds, which will activate the ADVANCED SETTINGS mode. The display should show **HC**.
3. Press the **+** or **-** key until the display shows **Ht**. To confirm the selection, press **Power key** (⏻) again (the save icon appears). Set the electric resistance heat wattage by pressing the **+** or **-** key. Options are as follows:
   - **no** – Electric resistance heat in both Heater 2 and Heater 3 are disabled.
   - **r1** – 900W of electric resistance heat is activated by choosing this option. When the room temperature falls 3.6°F (2°C) below the setpoint, Heater 2 is activated. Heater 3, however, is not activated in **r1** mode.
   - **r2** – 1800W of electric resistance heat is activated by choosing this option. When the room temperature falls 3.6°F (2°C) below the setpoint, Heater 2 is activated. If Heater 2 has been active for 20 minutes and the room temperature is still 5.4°F (3°C) below the setpoint, Heater 3 is activated.
4. To confirm and save the settings, press **Power key** (⏻) again (the save icon appears).
5. Press the A key 3 times to exit the Installer menu.

9.5 Connecting to the INNOVA Wi-Fi app

The AIO® Wall Mounted unit supports Wi-Fi and Bluetooth connectivity through a dedicated mobile app. Wi-Fi configuration allows the end user to monitor and control the unit remotely from a smartphone.

To use the Wi-Fi capability:

1. **Download the app.**
   To download the INNOVA app, scan the applicable QR code or click the applicable link below.

Android	iOS
Or click the link:	Or click the link:
Download the app from Google Play	Download the app from the Apple App Store

On these websites, the app is sometimes called **INNOVA Butler** instead of **INNOVA.**

2. **Install the app and create an account.**
   a. Follow the on-screen instructions to install the INNOVA app on your phone.
   b. When the installation is complete, click **Open**.
   c. Click **Register** and, when prompted, follow the on-screen instructions to register your account.
   d. Keep the app open, but do not begin the pairing process yet.
3. **Ensure the unit can be discovered by the app.**
   a. If the unit is not turned on, turn it on. The unit is now visible to the app for 15 minutes.
   b. If the unit is controlled by the onboard controller (no wired wall controller is connected), verify that the Wi-Fi capability on the unit is enabled by entering the Installer menu on the unit and ensuring that **co**

("Connectivity Expansion") is set to **YS** (enabled, as described in Section 9.4.

> If the unit is connected to a wired wall controller, Wi-Fi function is controlled by the wall controller. In this case, connectivity expansion on the unit must be disabled, and pairing must be enabled (if needed) in the wired wall controller menu.

c. If the unit has been turned on for more than 15 minutes, enter the User menu on the onboard touch controller and activate the Wi-Fi pairing.
   - If the unit is controlled by the onboard touch controller, refer to Section 9.3.
   - If an M7 wall controller is connected, refer to the "User menu" section in the M7 Wall Controller (EEB749 and EFB749) Installation and User Guide.

4. **Pair the controller in the app.**
   a. Immediately, in the INNOVA app, click **Allow** to grant the app permission to access Wi-Fi.
   b. Follow the on-screen instructions to pair the app with the controller.

9.6 Locking and unlocking the keypad

The Onboard Touch Controller can be locked to prevent unauthorized changes to settings. This is useful in hotel or commercial installations.

To lock or unlock the keypad:

- Press and hold the **+** and **–** keys simultaneously for approximately 3 seconds.
- The display will briefly show a keypad lock/unlock confirmation.
- When the keypad is locked, pressing any key displays "bL" on the screen.

9.7 Configuration checklist

Before proceeding with the system testing (Chapter 10), confirm that the following commissioning tasks have been completed:

- [ ] Unit powers on without active error codes.
- [ ] Firmware version has been verified via the Info & Commissioning menu (VE parameter).
- [ ] The temperature scale (°C or °F) has been set according to the customer's preference (CF parameter).
- [ ] The installation position (high wall or low wall) has been configured correctly (in the parameters).
- [ ] Heating/Cooling mode has been set as required (HC parameter).
- [ ] If applicable: Hotel mode has been enabled, and temperature setpoint limits have been configured (ho, HL, Hh, CL, Ch parameters).
- [ ] If applicable, the auxiliary heater type and operating mode have been configured (Ht, HE parameters).
- [ ] If applicable, the wired wall controller has been connected and the remote function enabled (rF parameter).
- [ ] If applicable: ERV module has been enabled and control logic configured (Hr, Hn parameters).
- [ ] Wi-Fi has been configured using the INNOVA Butler app, or the customer has been informed how to do so.
- [ ] Buzzer volume has been set per the customer's preference (Ub parameter).

Once all commissioning tasks are completed, proceed to Chapter 10: Testing the Unit.

10. RECORDING STARTUP DATA AND TESTING THE UNIT

After installing and configuring the unit, record the required startup data and test the unit to verify proper operation.

10.1 Recording startup data

Record the following information:

- [ ] Startup date and time
- [ ] Nameplate voltage
- [ ] Incoming voltage:
  - [ ] L1–N for 115 V units or L1–L2 for 230 V units
  - [ ] L1–ground
  - [ ] N–ground for 115 V units or L2–ground for 230 V units
- [ ] Running amperage
- [ ] Return-air temperature
- [ ] Supply-air temperature
- [ ] Outdoor-air temperature

10.2 Testing unit operation

To test the unit:

1. Confirm that the required indoor and exterior clearances are unobstructed.
2. Turn on the unit and verify that no error codes appear.
3. Set the unit to Cooling mode and select the lowest available temperature setpoint. Verify that the unit supplies cool air.
4. Allow the unit to operate in Cooling mode for approximately 20 minutes.
   - Verify that the condensate drainage system operates properly.
   - Record the running amperage, return-air temperature, supply-air temperature, and outdoor-air temperature.
   - Check for abnormal noise or vibration.
5. Turn off the unit and wait 10 minutes.

6. Set the unit to Heating mode and select the highest available temperature setpoint. Verify that the unit supplies warm air.
7. Test each available fan speed and verify that the fan responds correctly.
8. If a wall-mounted or remote controller is installed, use the controller to verify Cooling mode, Heating mode, and fan-speed operation.
9. Verify that no error codes appear after testing is complete.

11. POST-INSTALLATION TASKS

Before leaving the installation site, ensure that the following tasks are completed:

- **Clean-up**
  - Remove all packaging materials.
  - Wipe off any dust or debris from the unit using a damp cloth.
- **User handoff**

  Review the following with the user:
  - Key features and unit specifications
  - Basic operating instructions
  - Routine maintenance requirements
- If the unit is installed in a salty, chemical, or acidic environment, apply a protective coil coating, such as DiversiTech Coil Guard, to protect the coil surfaces from corrosion and ensure long-term performance.
- If the unit is installed on a construction site, protect it with tight plastic wrap and do not operate it until all dust and debris in the air have been removed.

12. SELF-CERTIFYING THE INSTALLATION

After completing the installation, startup, and operational testing procedures in this guide, self-certify the installation in accordance with the Self-Certification Training Guide.

The Self-Certification Training Guide explains the required documentation, photographs, submission procedure, and approval process.

For information about the warranty ramifications of self-certifying the installation, refer to the Warranty.

12.1 Commissioning record

Record the following project and technician information. Provide this information, together with the completed pre-start checks and the startup and operational test results recorded in Chapters 9 and 10, to the project manager.

Item	Information
Project/site	
Address	
Unit model	
Serial number	
Voltage rating	
Technician name	
Company	
Certification date and time	

13. WARRANTY

13.1 Basic coverage

- **Parts:** 5 years from delivery.
- **Compressor:** 10 years from delivery.
- **Labor:** 2 years from certification (only if at least 10 units are installed, the site is certified by INNOVA or self-certified, and spare stock equal to 3% of total units is maintained)
- **Controllers:** Covered under a 2-year warranty.

13.2 Optional extended coverage

- **Additional 2-Year Parts & Labor Warranty:** Extends the basic coverage to 4 years of labor and 7 years of parts.
- **Extended 10-Year Parts Warranty:** Extends parts coverage to 10 years total.
- **Extended 5-Year Full Warranty:** Extends full parts and labor coverage to 5 years total.
- **Extended 10-Year Full Warranty:** Provides a 10-year full warranty on parts, labor, and the compressor.
- **Extended 15-Year Full Warranty:** Provides a 15-year full warranty on parts, labor, and the compressor.

13.3 Validation requirements

- Installation must be certified by an INNOVA technician or self-certified within 30 days.
- Installers must complete INNOVA training.
- The system must comply with applicable codes, use approved louvers, and be properly maintained (e.g., clean filters monthly, coils every 18 months).

For warranty service or claims, contact INNOVA Support at vip@innova.co or (212) 204-2700.

For detailed terms and conditions, click the link below:

Single Package Systems 10-Year Warranty Terms...

APPENDIX A - DIMENSIONS

To view the dimensions of the AIO® Wall Mounted unit as a high-resolution PDF, click the link below:

AIO Wall Mounted Standard Gen 2 and 3 Dimensi...

Figure 19. Wall Mounted standard dimensions



Figure 20. Wall Mounted standard dimensions

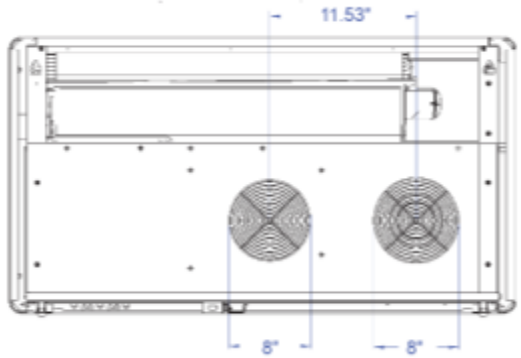

Figure 21. Dimensions (top view)

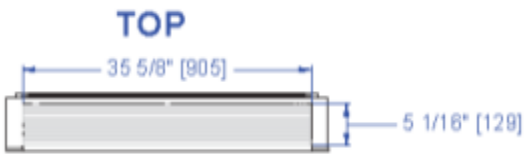

Figure 22. Dimensions (left view)



Figure 23. Dimensions (front view)

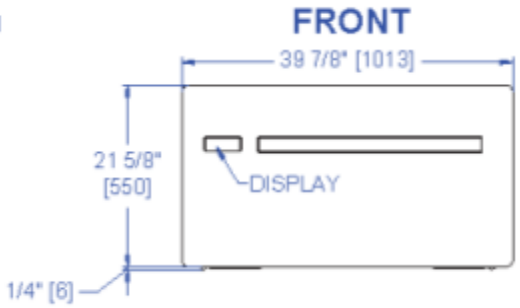

Figure 24. Dimensions (right view)



Figure 25. Dimensions (bottom view)

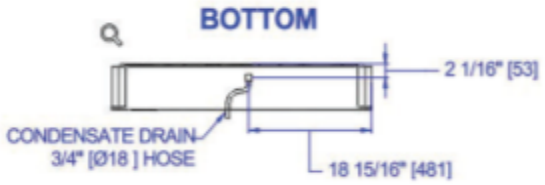

Figure 26. Dimensions (rear view)

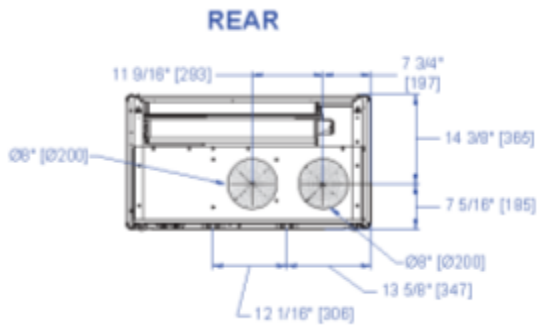

Figure 27. Gasket accessory (reducer from 8" to 6")

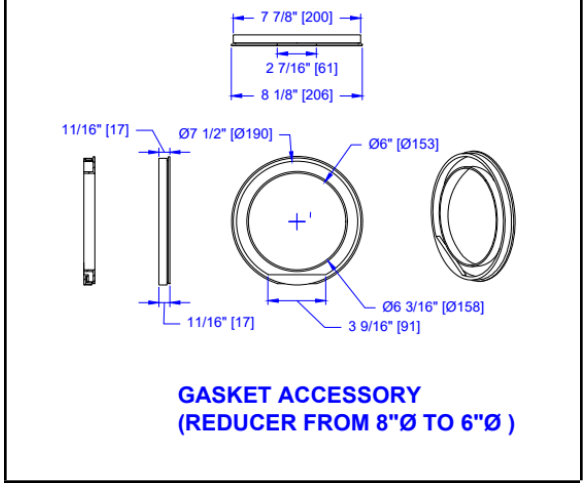

Special-Production (SP) AIO® Wall Mounted units have 6" vents.

APPENDIX B - WIRING DIAGRAMS

The following are the wiring diagrams for AIO® Wall Mounted units.

B.1 AIO® Wall Mounted 115V wiring diagram

To view the diagram as a high-resolution PDF, click the link below:

AIO Wall Mounted 115V Heat Pump only Wiring Dia...

Figure 28. Wall Mounted 115V wiring diagram

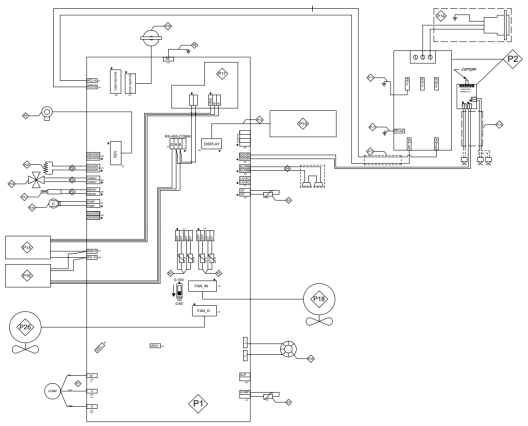

Table 7. Wall Mounted 115V wiring parameters

Part	Description	INNOVA Code	Notes
P1	Integrated PCB	N540205A	Included in N576205A
P2	Filter 2.0 18A PCB	N560536A	Included in N576205A
P3	EEV Coil	N276928B	Included in N576205A
P4	Pan cables harness	N576205A_02	Included in N576205A
P5	4way valve cable + temperature sensor	N576205A_03	Included in N576205A
P6	Indoor and Incoil temperature sensors	N576205A_04	Included in N576205A
P7	Compressor cables + discharge temperature sensor	N576205A_05	Included in N576205A
P8	PE IntPCB	N576205A_06	Included in N576205A
P9	Kit wiring heating elements	N576205A_07	Included in N576205A
P10	Display cable	N576205A_08	Included in N576205A
P11	PE filter wiring diagram	N576205A_09	Included in N576205A
P12	Transfer cables wiring diagram	N576205A_10	Included in N576205A
P13	Power supply to IntPCB	N576205A_11	Included in N576205A
P14	Power cable with USA 2.0 NC connector	N500399A	
P15	Power + RS485 cable for ERV 2.0 NC	N500400A	
P16	2.0 NC Rolbit power + communication cable	N500403A	
P17	WI-FI Expansion 2.0/WLH	N540217A	
P18	Internal Fan	N276300B	
P19	Display	N570177A	
P20	Flap motor	N276014A	
P21	Drain Thermoactuator	276417A	
P22	Heating Element Kit	N560052A	115 version
P23	4-way Valve	N276939A	115 version
P24	Drain Pump	N640020A	115 version
P25	PFC Reactor	N560538A	115 version
P26	External Fan	N520012B	

B.2 AIO® Wall Mounted 115V (with resistance heating strips) wiring diagram

To view the diagram as a high-resolution PDF, click the link below:

AIO Wall Mounted 115V with Electric Heat Wiring Di...

B.3 AIO® Wall Mounted 230V (with optional resistance heating strips) wiring diagram

To view the diagram as a high-resolution PDF, click the link below:

AIO Wall Mounted 230V with electric heat.pdf

Figure 29. Wall Mounted 230V (with electric heat) wiring diagram

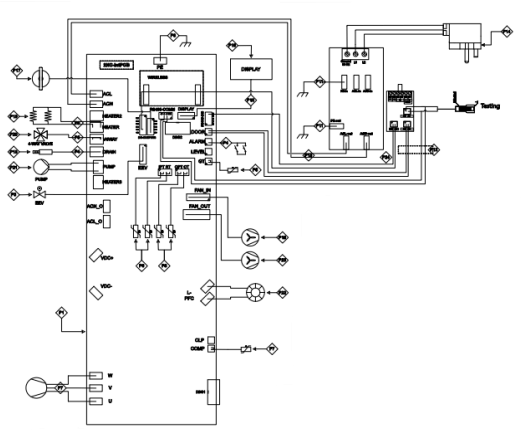

Table 8. Wall Mounted 230V (with electric heat) wiring parameters

Part	Description
P1	Integrated PCB
P2	Filter 2.0 18A PCB
P3	EEV Coil
P4	Pan cables harness

P5	4way valve cable + temperature sensor
P6	Indoor and Incoil temperature sensor
P7	Compressor cables + discharge temperature sensor
P8	PE IntPCB
P9	Kit wiring heating elements
P10	Display cable
P11	PE filter wiring diagram
P12	Transfer cables wiring diagram
P13	Power supply to IntPCB
P14	Power cord
P15	Internal Fan
P16	Display
P17	Flap motor
P18	Drain Thermoactuator
P19	Heating Element Kit
P20	4-way valve
P21	Drain Pump
P22	PFC Reactor
P23	External Fan
P24	Transfer PCB V1_1 Cable

B.4 AIO® Wall Mounted 230V diagram for attaching a third-party condensate pump

To attach a third-party condensate pump to the AIO Wall Mounted (230V) unit, see the diagram in the link attached below:

AIO Wall Mounted 230V Wiring Diagram for Conn...

Figure 30. Wall Mounted 230V third-party condensate drain connection wiring diagram

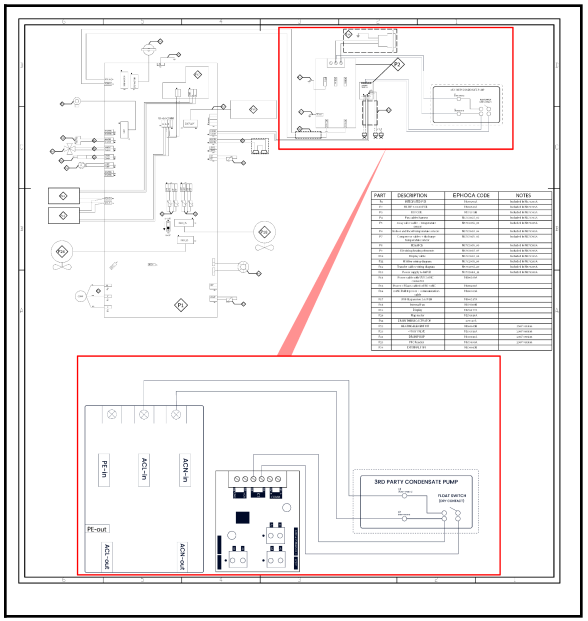

APPENDIX C - GLOSSARY

Table 9. Glossary

Term	Definition
A2L	ASHRAE/ANSI safety classification for refrigerants with low toxicity and mild flammability; applies to the R-32 refrigerant used in this unit.
AHRI	Air-Conditioning, Heating, and Refrigeration Institute; the unit's performance ratings are certified under the AHRI Unitary Small Heat Pump Equipment (USHP) program per ANSI/AHRI Standard 210/240.
Anti-Lift Bracket	A pair of factory-supplied brackets fastened to the wall to prevent the unit from lifting off the wall bracket during operation or servicing.
AWG	American Wire Gauge; conductor sizing standard (e.g., 18 AWG shielded four-conductor cable for dry-contact runs longer than 30 ft).
Contact Presence (CP)	Status displayed on the Onboard Touch Controller when an external dry-contact input places the unit in standby mode.
ERV	Energy Recovery Ventilator: An optional field-installed module that exchanges stale indoor air with fresh outdoor air while transferring heat and moisture between the two airstreams, improving indoor air quality and reducing energy consumption.
Exterior louver	An exterior vent assembly with slats that allows air to pass while resisting rain, debris, and pests. Performance is described by free area and pressure drop; only INNOVA-approved louvers may be used.
Hardwired	A direct electrical connection from the unit to a dedicated circuit breaker using a Quick connect whip cord or field-wired cable terminated in a junction box.
Heat strips	Optional 900 W electric resistance heating elements (two per unit on 230 V models) that provide supplemental heat when low ambient temperatures prevent the heat pump from operating effectively.
LCDI	Leakage Current Detection and Interruption: A power cord with built-in leakage-current protection used to connect the unit to a

Term	Definition
	grounded power outlet.
LOTO	Lockout/Tagout; OSHA-compliant procedures requiring all power sources to be de-energized, locked, and tagged before installation or service work.
Nebulizer	An optional accessory that collects condensate, vaporizes it through a heated nozzle, and discharges it safely outdoors; used as an alternative to a gravity drain.
NEC	National Electrical Code: The U.S. standard governing electrical wiring and connections. All electrical work on this unit must comply with the NEC and applicable state and local codes.
Onboard Touch Controller	The built-in touch-sensitive display and control panel, clipped to the front cover panel. It is used to operate the unit and access Installer menus.
OSHA	Occupational Safety and Health Administration; U.S. workplace safety standards referenced for safe installation, LOTO procedures, and PPE requirements.
PPE	Personal Protective Equipment: Protective gear (e.g., gloves, safety goggles, protective clothing) required when handling refrigerant, hot components, or sheet-metal parts.
Quick connect whip cord	An electrical whip cord with a quick-disconnect connector at one end and wire leads at the other, used to hardwire the unit to a junction box.
R-32	The single-component hydrofluorocarbon (HFC) refrigerant (difluoromethane) used in this unit; classified A2L (low toxicity, mildly flammable) with a GWP of 675. R-32 is a single-component hydrofluorocarbon (HFC) refrigerant used in modern air conditioning and heat pump systems.
Rating plate	The factory-applied label on the unit (located on the upper-right side of the electrical cover) shows the model number, serial number, electrical specifications, and compliance markings.
Vent Sleeve	A cylindrical insert that is placed in each borehole through the exterior wall that lines the vent. It must be flush with the interior wall surface and sealed with silicone to prevent air

Term	Definition
	leakage.
Surge protection	A dedicated surge protector or building-wide surge protection system is required to protect the unit from voltage spikes; failure to use surge protection may void the warranty.

APPENDIX D - REVISION HISTORY

Rev	Date	Revised By	Changes
2.0	2026-04-27	Jason Rosenberg	Complete revision
2.1	2026-05-14	Jason Rosenberg	Startup and Configuration chapter added

With over 20 years of experience in the climate comfort sector, we have a clear goal: growth through innovation. Our team is laser-focused on the conception, development, and production of innovative heating, ventilation, and air conditioning solutions. This mission has developed through bringing together technical skills, creativity, technology, design, Italian passion, and a global vision to achieve the best energy efficiency and performance.

innova.co | **USA:** 216-710-1000 **Canada:** 416-739-1000

MADE IN ITALY

© 2026 INNOVA. All rights reserved.

Revised October 14, 2026

AIO® Wall Mounted (Gen 3) **Installation Guide**