AIO® Wireless BACnet Module (W-BACnet)

Installation and User Guide

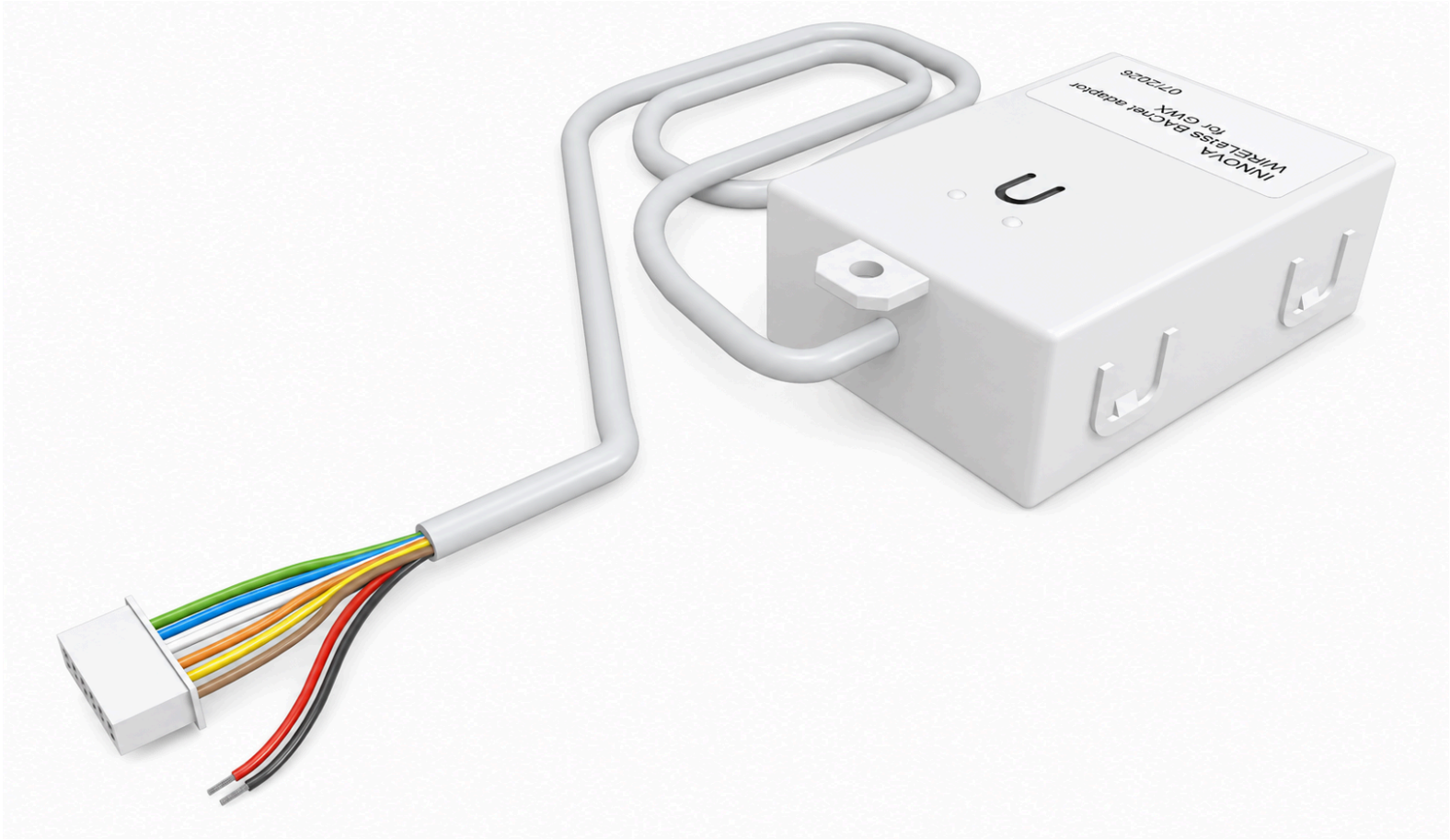

innova

CONTACT INFO

VIP Customer/Technical Support
Email: vip@innova.co
Phone: (212) 204-2700

DISCLAIMER

IMPORTANT - TRAINING IS REQUIRED PRIOR TO PERFORMING INSTALLATION.

While this guide outlines the general installation requirements for the unit, it does not replace required installer training. Before commencing installation, the project manager must contact the INNOVA VIP Department at (212) 204-2700 to coordinate training for the installer.

Failure to ensure that installation is performed by INNOVA-trained personnel may result in improper operation or equipment damage, and may void the warranty.

Training may be conducted in person or remotely (online).

This documentation is intended for informational use only and should not be construed as a binding representation or contract. This documentation is provided “as is” without warranty of any kind, either express or implied. INNOVA and its affiliates disclaim all liability arising from the use or misuse of this documentation.

Illustrations may not be to scale, and all information and dimensions stated herein are subject to change at any time at the sole discretion of INNOVA. Benefits described herein apply only to the extent that the product is installed correctly in the correct application and used for its intended purpose.

INNOVA is constantly innovating and improving its products and reserves the right to modify product design and specifications without notice and without incurring any obligations.

REVISION HISTORY

Rev	Date	Revised By	Changes
A	2026-07-26	Leah Kuber	New document

AIO® is a registered trademark of INNOVA.

Copyright © 2026 INNOVA. All rights reserved.

CONTENTS

1. ABOUT THIS GUIDE..... 4

1.1 Specific language..... 4

1.2 Safety notices, icons, and symbols..... 4

2. W-BACNET MODULE OVERVIEW.....5

2.1 W-BACnet network description..... 5

2.2 AIO® unit and gateway compatibility..... 5

2.3 W-BACnet connection to GWX gateway..... 5

3. SAFETY GUIDELINES - READ BEFORE INSTALLING.....6

3.1 Fire/explosion hazards..... 6

3.2 Electrical hazards..... 6

3.3 Moving parts hazards..... 6

3.4 General safety guidelines..... 7

3.5 Installer responsibilities..... 7

4. PREPARING FOR INSTALLATION.....7

4.1 Shipping configuration..... 7

4.2 Inspecting the package..... 7

4.3 Required tools and supplies..... 7

5. INSTALLING THE W-BACNET MODULE IN AN AIO® UNIT. 8

5.1 Opening the unit and installing the gateway..... 8

5.2 Attaching the W-BACnet module to the unit..... 8

5.3 Connecting the W-BACnet module to the gateway..... 8

5.4 Pairing the W-BACnet module with the server. 9

5.5 Closing the unit..... 9

6. WARRANTY TERMS AND CONDITIONS.....10

6.1 Exclusions and limitations..... 10

1. ABOUT THIS GUIDE

This guide outlines the required procedures for safely installing the W-BACnet module in an AIO® Heat Pump unit and connecting it to a GWX gateway control board. Following these instructions reduces the risk of equipment damage, improper installation, and potential safety hazards.

The module enables wireless connectivity with building management systems using the BACnet protocol.

Important: Read the entire installation guide before beginning any installation tasks. Pay close attention to all safety warnings and notices.

1.1 Specific language

Some language and symbols in this guide have specific meanings.

Reference to the products
All references to "the module" refer to the W-BACnet module that is being installed.

All references to "the unit" or "the AIO® unit" refer to the specific AIO® heat pump unit where the W-BACnet module is being installed.

All references to "the gateway" or "the gateway board" refer to the GWX gateway control board that is installed inside the unit.

Unit orientation
All directions in this guide (left, right, top, and bottom) are given from the perspective of facing the unit.

Role definitions
This guide is primarily intended for installers. The roles of end users and service technicians are also defined here for reference.

- **User:** A non-expert who can safely operate the unit and perform basic diagnostics and maintenance.
- **Installer:** A trained and certified HVAC installation technician responsible for the correct installation of the unit as indicated in the installation guide and in accordance with all local and national codes.
- **Service technician:** A trained and qualified HVAC professional who performs service or maintenance in compliance with OSHA safety requirements, recognized industry best practices, and all applicable federal, state, and local codes and standards.
- **Trained HVAC technicians:** A group term for both installation and service technicians.

1.2 Safety notices, icons, and symbols

Warnings, Cautions, and Annotations are included throughout this guide. Read each carefully and follow the stated instructions.

Safety notices
Each safety notice represents the level and immediacy of risk. Each warning panel displays a background color and a signal word and includes an icon to specify the topic.

DANGER

A red notice with the **DANGER** title indicates an imminently hazardous situation that could result in death or serious injury if not avoided.

WARNING

The orange notice with the **WARNING** title indicates a potential hazard that, if not avoided, could result in death or serious injury.

CAUTION

The yellow notice with the **CAUTION** title indicates a hazardous situation that, if not avoided, could result in minor to moderate injury or property damage.

Warning icons
The warning icons indicate the type of risk and are used in conjunction with the safety notice panels.

	The flame icon indicates information related to a hot surface or explosion hazard.
	The lightning-bolt icon indicates a warning related to electrical hazards.
	The hand icon indicates information related to a hazard involving moving parts and sharp surfaces.
	The exclamation-mark icon indicates general hazards (environmental, lifting, and other categories).

Annotation icons
Annotations are provided throughout this guide. It is important to read each one carefully and follow the stated instructions.



Indicates instructions or information that is important to note to ensure optimal installation or operation of the unit.



Indicates supplemental information, tips, or useful background information.

2. W-BACNET MODULE OVERVIEW

The W-BACnet (Wireless BACnet) module enables wireless connectivity between an AIO® Heat Pump unit and a building management system that uses the BACnet communication protocol.

The W-BACnet module is installed inside the INNOVA AIO® heat pump unit and is connected to the unit via a GWX gateway control board.

2.1 W-BACnet network description

The W-BACnet network consists of a single LumenRadio W-BACnet router that is connected via a wired connection to the building management system's server and via a wireless connection to the individual W-BACnet modules. Each of these W-BACnet modules is then connected via a wired connection to a GWX gateway that is mounted inside an AIO® heat pump unit.

Figure 1. Wireless BACnet system structure

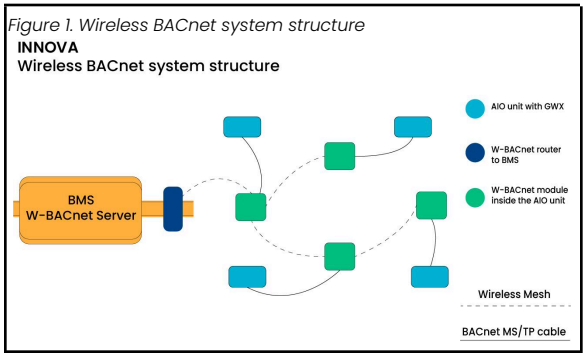

2.2 AIO® unit and gateway compatibility

To enable the W-BACnet module to communicate with the AIO® unit, a GWX gateway control board must be installed in the unit.

It is specifically required to have a GWX gateway installed in the unit together with the W-BACnet module, since the GWX is the only gateway that is BACnet-certified.

The W-BACnet module can be used with all AIO® heat pump units that are compatible with the GWX gateway. This includes the following AIO® units:

- Wall Mounted Standard/Pro (Gen 2+ only)
- Ceiling Ducted (with and without ERV option)
- Ceiling Suspended (with and without ERV option)
- Vertical Stack
- Vertical Stack XL

All references to the AIO® Wall Mounted unit refer to both the standard Wall Mounted and the Wall Mounted Pro units.

The W-BACnet module and the GWX gateway control board are optional components for the AIO® unit. They must only be used for this purpose.

2.3 W-BACnet connection to GWX gateway

The W-BACnet module connects to the GWX building management port via two lead wires and to the GWX Wi-Fi port via a 6-wire connector. Detailed connection procedures are described in Section 5.3 below.

Figure 2 shows the wiring connections between the Wireless BACnet (W-BACnet) module and the GWX gateway board.

Figure 2. W-BACnet module wiring connections to GWX

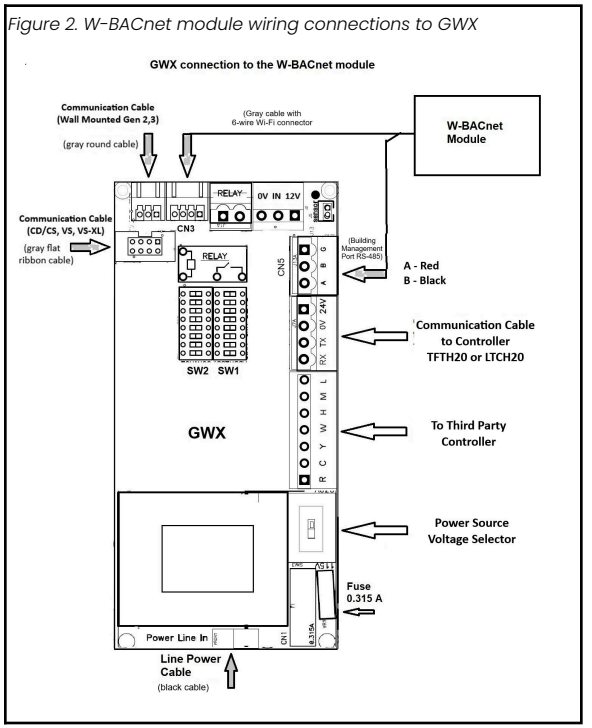

3. SAFETY GUIDELINES - READ BEFORE INSTALLING

This guide details the proper steps for the safe installation of a Wireless BACnet (W-BACnet) module in an AIO® heat pump. By following these instructions, the risk of equipment damage and personal injury can be significantly reduced.

Read the entire installation guide before installing the gateway. Pay careful attention to all safety notices and warnings.

Failure to apply the indicated rules may cause malfunctions in the appliances and relieve the manufacturer of any warranty and of any liability for damage to persons, animals, or property.

All safety regulations in force at the installation site, as well as common-sense precautions, must be followed.

The precautions listed in this installation guide are intended to supplement accepted safe practices. In case of a direct conflict between accepted safety practices and this guide, the more stringent precaution takes precedence.

Failure to follow the instructions in this guide can result in property damage, serious injury, or death.

3.1 Fire/explosion hazards

⚠ WARNING

- In the event of abnormal conditions (such as a strange or burning smell, noise, or smoke), turn off the unit and disconnect it from its power source immediately. Report the issue immediately to your INNOVA representative or distributor.
- Servicing shall be performed only as recommended by the manufacturer.

3.2 Electrical hazards

⚠ DANGER

- Only trained HVAC technicians may install the RTS module. Improper modifications by an unqualified person can result in serious injury or death.
- When working on the equipment, observe all precautions in the guide and on labels attached to the equipment.
- Before installation, maintenance, or servicing, disconnect power to the entire system. Verify that power to the entire system is down, including any remote disconnects, peripherals, third-party devices, and devices operating on the unit's network.
- Follow all OSHA-compliant Lockout/tagout (LOTO) procedures.

⚠ WARNING

- All electrical connections, wiring, and grounding must be done by a qualified electrician and must comply with the National Electrical Code (NEC/NFPA-70) and all local codes that hold jurisdiction. Improper wiring or loose connections may cause overheating, fire, or electric shock.
- Use only the supplied installation-specific components. Using different components could lead to water leakage, electric shock, or fire.
- Do not open access panels to the interior of the unit without first disconnecting the power and/or turning off the breaker.
- The unit contains capacitors that may retain an electrical charge after the power is disconnected. Thus, before beginning any installation or servicing, to avoid electrical shock or serious injury, be sure to:
  - Discharge all motor start-run capacitors.

⚠ WARNING

  - Verify (using a voltmeter) that no power is running into the unit.
  - Wait at least five minutes for the AIO® unit to cool down and for the capacitors inside the unit to discharge.

⚠ CAUTION

In the event of a blackout or thunderstorm, turn the unit off and disconnect it from the power source immediately.

3.3 Moving parts hazards

⚠ DANGER

- Do not operate the equipment with panels, guards, or covers removed, except as specifically instructed in the procedures below to test the installation.
- Ensure power is disconnected and components have come to a complete stop before accessing the interior. Internal fans, motors, and other moving components may start automatically when power is supplied.

⚠ WARNING

- Keep hands, hair, tools, and loose clothing away from fans and moving components. Contact with moving parts can cause serious injury.
- Do not remove, bypass, or disable protective covers, guards, or safety interlocks.

3.4 General safety guidelines

⚠ WARNING

- Do not modify or tamper with the gateway or controller. Unauthorized alterations may compromise safety, create hazardous conditions, and void the warranty.
- Wear appropriate personal protective equipment (PPE) such as gloves and safety glasses during the installation process.
- Only a qualified HVAC professional may install this unit. The installer must be licensed, insured, or bonded, as required by local regulations.

Installation by anyone other than an INNOVA-trained and qualified HVAC professional voids the warranty on the unit and the module.

3.5 Installer responsibilities

- Install the unit safely and in accordance with all applicable local and national codes and regulations.
- Ensure that you fully understand the product and the installation procedures before beginning installation. Installation activities involve greater risk than normal system operation.
- Provide the customer with the information necessary to operate the system safely after installation.

The safety precautions in this guide are intended to supplement recognized best practices. In the event of a conflict, the more stringent safety measure always takes precedence.

4. PREPARING FOR INSTALLATION

4.1 Shipping configuration

The W-BACnet module package includes:

- The W-BACnet module.
- A cable pre-connected to the module that includes eight colored wires. The red and black wires are unterminated, and the other 6 wires are terminated with a white plug-in connector.
- Double-sided adhesive foam tape.
- 1 mounting screw.

Figure 3. W-BACnet module illustration

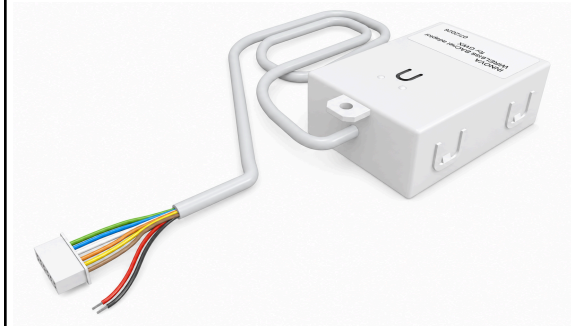

4.2 Inspecting the package

When the shipment is received, inspect it thoroughly before proceeding to installation:

1. Ensure that the contents match the order and shipping documents.
2. Inspect the entire module and wiring for any damage that may have occurred during shipping.
3. If the package or contents appear damaged:
    a. Photograph all damage and all sides of the component to support a damage claim.
    b. Clearly document the damage on the freight bill.
    c. Notify your INNOVA representative or distributor.

Report all damage within two weeks of delivery to be eligible for a claim.

4.3 Required tools and supplies

- Mini (⅛") flathead screwdriver.
- Alcohol pad.
- Double-sided adhesive foam tape.

5. INSTALLING THE W-BACNET MODULE IN AN AIO® UNIT

To install the W-BACnet module in an AIO® unit, perform the following steps:

1. Open the AIO® unit: See Section 5.1.
2. Install the GWX gateway in the unit (if not installed already): See Section 5.1.
3. Attach the W-BACnet module to the unit. See Section 5.2.
4. Connect the W-BACnet module wiring to the gateway. See Section 5.3.
5. Pair the W-BACnet module with the BACnet router. See Section 5.4.
6. Close the AIO® unit: See Section 5.5.

5.1 Opening the unit and installing the gateway

⚠CAUTION

Before opening the unit, make sure the power supply is disconnected and that at least five minutes have passed since it was last operated.

The procedures for opening the AIO® units and for installing the GWX gateway (if needed) are provided in the AIO® GWX Gateway for AIO® Heat Pumps Installation Guide. Table 1 below lists the sections that describe the applicable procedures for each AIO® unit.

1. Open the unit according to the procedure in the GWX installation guide in the "Open" section listed in Table 1.
2. If the gateway is not already installed in the unit, install it according to the procedure in the GWX installation guide in the "Install" section(s) listed in Table 1.

Table 1. GWX Installation guide sections for opening units and installing gateways

AIO® unit type	"Open" section	"Install" sections
Wall Mounted (Gen 2)	7.1	7.2, 7.3
Wall Mounted (Gen 3)	8.1	8.2, 8.3
Ceiling Ducted (all)	9.1	9.2, 9.3
Ceiling Suspended (with ERV option)	9.1	9.2, 9.3
Ceiling Suspended (without ERV option)	10.1	10.2, 10.3
Vertical Stack	11.1	11.2, 11.3
Vertical Stack XL	12.1	12.2, 12.3

5.2 Attaching the W-BACnet module to the unit

The W-BACnet module must be mounted inside the AIO® unit, in a location that meets both of the following conditions:

- Is near enough to the GWX gateway to connect the module's wires to the gateway, and
- Is near the bottom of the unit or another place where the module is not completely enclosed by metal panels.

Do not install the module inside a fully enclosed metal compartment, including right next to the gateway where there is no exposure to the outside of the unit. Metal panels can shield the wireless signal and reduce the module's communication range.

1. **Prepare the mounting location.**
   a. Find a space inside the unit where the W-BACnet module will fit and that meets the conditions above.
   b. Clean the mounting location with an alcohol pad to ensure proper adhesion.
2. **Mount the W-BACnet module to the unit.**
   a. Cut the double-sided adhesive foam tape to fit the W-BACnet module and attach it to the back of the module.
   b. Using the foam tape, mount the W-BACnet module at the unit's mounting location, then press firmly to ensure the module is securely attached.

⚠CAUTION

Make sure there is no direct contact between the W-BACnet module and the metal panel.

5.3 Connecting the W-BACnet module to the gateway

There are two connections that must be made between the W-BACnet module and the GWX gateway:

- Between the W-BACnet module and the Wi-Fi port on the GWX, via the white 6-wire connector.
- Between the W-BACnet module and the Building Management port on the GWX, via the red and black lead wires.

Figure 4. Wi-Fi and Building Management ports on GWX

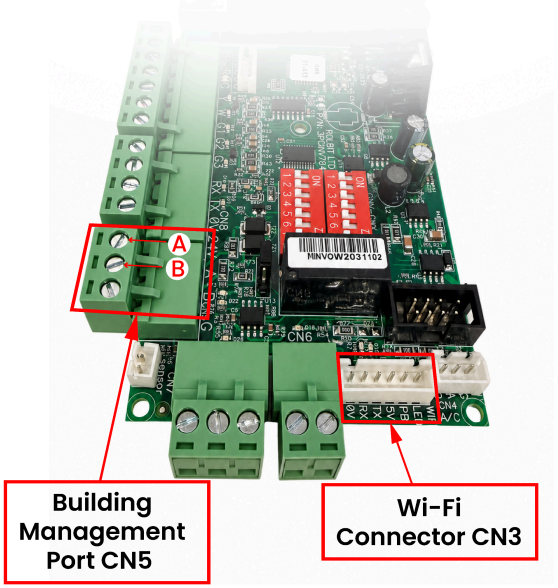

The details of these connections are described below.

1. **Connect the W-BACnet module to the Wi-Fi port.** Connect the white plug-in connector with the six colored wires to the 'CN3' Wi-Fi port on the GWX gateway.
2. **Connect the W-BACnet module to the Building Management port.**
   a. Locate the 'CN5' building management terminal block on the GWX gateway, with three terminals labeled A, B, and G.
   b. Connect the red unterminated lead wire to terminal 'A'.
   c. Connect the black unterminated lead wire to terminal 'B'.

Figure 5. W-BACnet module connected to the GWX

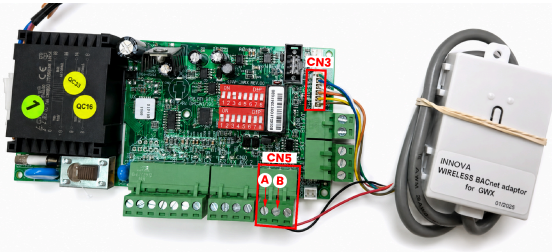

3. **Set the DIP switches on the GWX.**
   a. In the SW1 DIP switch bank, set DIP switches 1-7 to the unit's MAC address on the BACnet network.
   b. In the SW2 DIP switch bank, set DIP switch #3 to ON.

Figure 6. DIP switches on the GWX (illustration only)

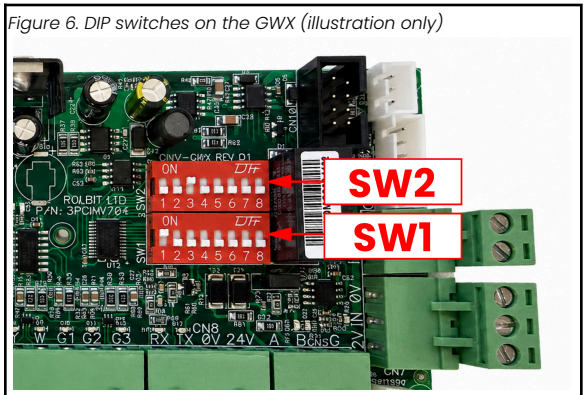

For more information about setting the GWX DIP switches, refer to the following sections of the AIO® GWX Gateway for AIO® Heat Pumps Installation Guide:

- For SW1 DIP switches: Section 13.1.1.
- For SW2 DIP switches: Section 13.2.

5.4 Pairing the W-BACnet module with the server

After the W-BACnet module has been mounted onto the unit and connected to the gateway, it must be paired with the building's W-BACnet router in order to add it to the BACnet network.

To pair the W-BACnet module with the router:

1. Reconnect the power supply to the unit and power it on.
2. Make sure the W-BACnet router is turned on and the switch is set to the pairing ("commissioning") position.
3. Press the pairing button on the W-BACnet module.

Figure 7. W-BACnet module pairing button



The LED on the module begins blinking quickly, indicating that the pairing process is in progress.

Figure 8. W-BACnet module LED



When the module has paired successfully with the router, the LED begins blinking slowly.

4. Make sure the switch on the W-BACnet router is moved to the normal operation ("gateway") position.

   When the LED stops blinking and remains on, the W-BACnet module has been successfully paired with the server and is now ready for operation.

If the LED does not begin blinking or turns off completely, check the connections.

5.5 Closing the unit

After the W-BACnet unit has been installed, connected, and paired, close the unit as instructed in the AIO® GWX Gateway for AIO® Heat Pumps Installation Guide, in the applicable chapter listed in Table 2.

Table 2. GWX Installation guide sections for closing the unit

AIO® unit type	"Close" section
Wall Mounted (Gen 2)	7.4
Wall Mounted (Gen 3)	8.4
Ceiling Ducted (all)	9.4
Ceiling Suspended (with ERV option)	9.4
Ceiling Suspended (without ERV option)	10.4
Vertical Stack	11.4
Vertical Stack XL	12.4

6. WARRANTY TERMS AND CONDITIONS

Controllers, gateways, and their accessories carry a two-year warranty.

6.1 Exclusions and limitations

The above-noted warranty shall not cover:

- Any damage resulting from improper voltage supplied to the AIO® unit.
- Damage to a controller, gateway, or accessory device where there is a corrosive atmosphere containing any damaging chemical, such as chlorine or fluorine.
- Failure of the controller, gateway, or accessory device due to acts of God, natural disasters, power failures, interruptions, brownouts or power spikes, or due to incorrect or inadequate electrical service, or failure of internet services or home networks.
- Damages or personal injury caused directly or indirectly by failure or malfunction of the controller, gateway, or accessory device as a result of any cause, including natural disasters, accidents, misuse, improper wiring, or installation.

For warranty service or claims, contact INNOVA Support at vip@innova.co or (212) 204-2700.

With over 20 years of experience in the climate comfort sector, we have a clear goal: growth through innovation. Our team is laser-focused on the conception, development, and production of innovative heating, ventilation, and air conditioning solutions. This mission has developed through bringing together technical skills, creativity, technology, design, Italian passion, and a global vision to achieve the best energy efficiency and performance.

innova.co | **USA:** 216-710-1000 **Canada:** 416-739-1000

MADE IN ITALY

© 2026 INNOVA. All rights reserved.

Revised August 22, 2026

AIO® Wireless BACnet Module (W-BACnet)
Installation and User Guide