AIO® Wireless BACnet Module (W-BACnet)

Product Data Sheet

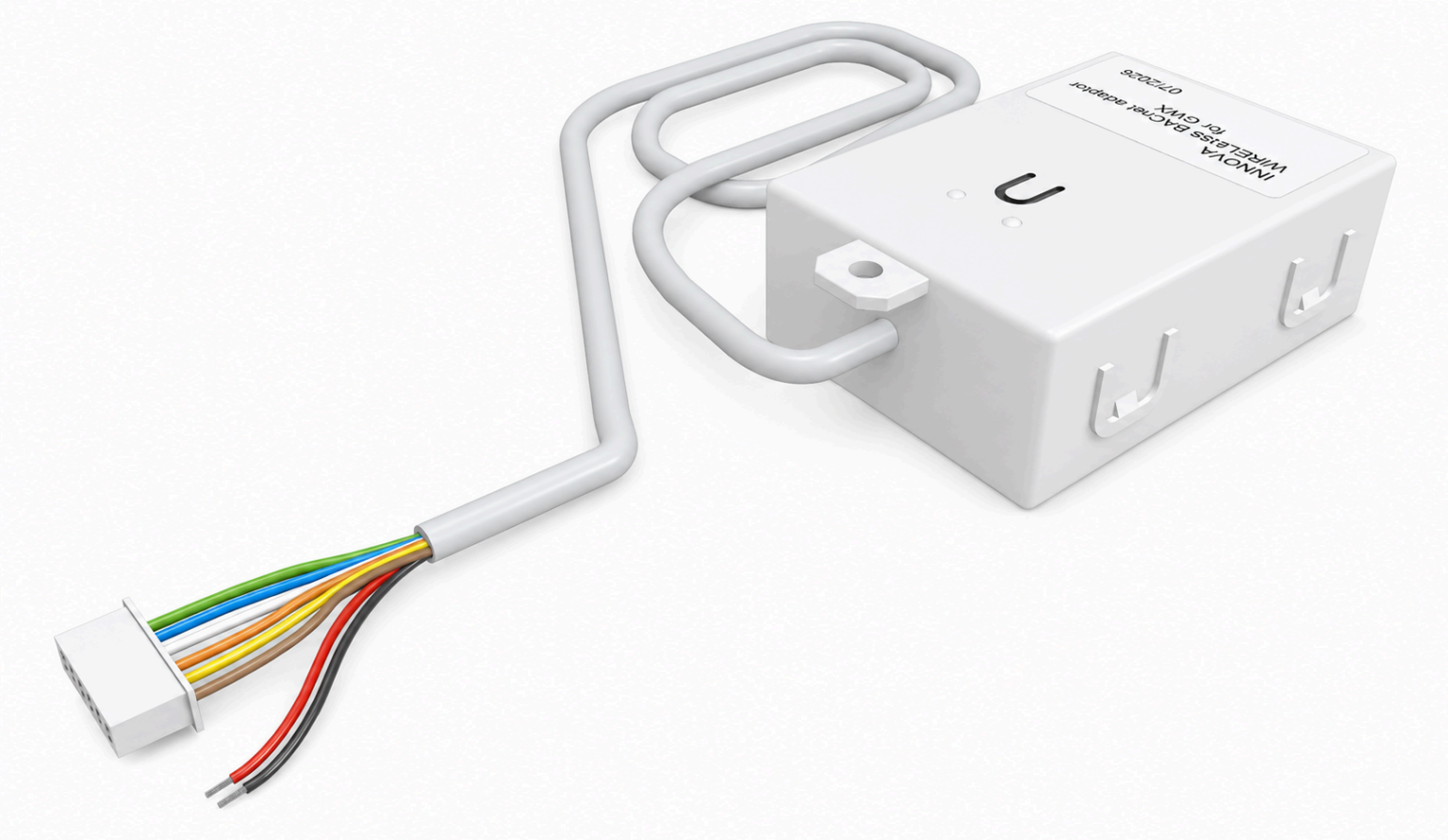

innova

CONTACT INFO

VIP Customer/Technical Support
Email: vip@innova.co
Phone: (212) 204-2700

DISCLAIMER

This documentation is intended for informational use only and should not be construed as a binding representation or contract. This documentation is provided "as is" without warranty of any kind, either express or implied. INNOVA and its affiliates disclaim all liability arising from the use or misuse of this documentation.

Illustrations may not be to scale, and all information and dimensions stated herein are subject to change at any time at the sole discretion of INNOVA. Benefits described herein apply only to the extent that the product is installed correctly in the correct application and used for its intended purpose.

INNOVA is constantly innovating and improving its products and reserves the right to modify product design and specifications without notice and without incurring any obligations.

⚠ WARNING

Only qualified professionals should install and service this equipment. Improper installation or modification by an unqualified person could result in death or serious injury. When working on the equipment, observe all precautions in the installation manual and labels attached to the equipment.

REVISION HISTORY

Rev	Date	Revised By	Changes
A	2026-07-27	Leah Kuber	New document

AIO® is a registered trademark of INNOVA.

Copyright © 2026 INNOVA. All rights reserved.

1. AIO® WIRELESS BACNET MODULE (W-BACNET)

The W-BACnet (Wireless BACnet) module enables wireless connectivity between an AIO® Heat Pump unit and a building management system that uses the BACnet communication protocol.

The W-BACnet module simplifies BACnet installations by replacing the control cable with a wireless connection. This significantly reduces the issues associated with running control cables.

The W-BACnet module is installed inside the INNOVA AIO® heat pump unit and is connected via a wired connection to the GWX gateway control board that is installed in the unit. The W-BACnet module is then paired via a wireless connection to the LumenRadio W-BACnet network gateway for the building or zone, which connects by cable to the building's BACnet MS/TP network.

Note: Although LumenRadio refers to their device as a "W-BACnet network gateway", we refer to it as a "router" to avoid confusion with the GWX gateway control board installed inside the AIO® unit.

The W-BACnet module uses the international license-free ISM band at 2.4/5 GHz, the same band used by Wi-Fi and Bluetooth.

Up to 100 heat pump units, each with a GWX gateway control board and a W-BACnet module, can be paired with one W-BACnet router.

Figure 1. Wireless BACnet system structure

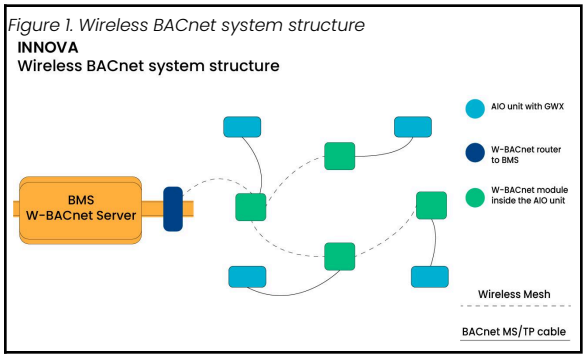

1.1 AIO® W-BACnet module submittal

Job	Reference
Construction	Location
Approval	Quote Number
Engineer	Date
Drawing Number	P.O. Number:
Submitted To	Submitted By:

2. SPECIFICATIONS

- **Range:** up to 1,600 feet (500 meters) line of sight between two meshing units.
- **Output (ERP):** Max 20 dBm
- **Sensitivity:** -94 dBm
- **Link budget:** 114 dB
- **Frequency band:** 2.45 GHz, ISM band (2402-2480 MHz)
- **Operating temperature:** 32°F -- 160°F (0°C --- 70°C)
- **Dimensions:**
  - Length: 2.17" (55 mm)
  - Width: 1.57" (40 mm)
  - Depth: 0.59" (15 mm)
  - Weight: 1.76 oz2. (50 g)
- **Warranty:** Two-year limited warranty.

3. WIRING AND INSTALLATION

The W-BACnet module has one black cable with eight colored wires for connecting to a GWX gateway. The red and black wires are connected to the A and B terminals, respectively, in the 'CN5' Building Management port on the GWX, and the other 6 wires are attached to a white connector that plugs into the 'CN3' Wi-Fi connector on the GWX.

4.1 AIO® unit and gateway compatibility

To enable the W-BACnet module to communicate with the AIO® unit, a GWX gateway control board must also be installed in the unit. The GWX gateway is specifically required, since it is the only gateway that is BACnet-certified.

The W-BACnet module can be used with all AIO® heat pump units that are compatible with the GWX gateway. This includes the following AIO® units:

- Wall Mounted Standard/Pro (Gen 2+ only)
- Ceiling Ducted (with and without ERV option)
- Ceiling Suspended (with and without ERV option)
- Vertical Stack
- Vertical Stack XL

The W-BACnet module is not compatible with AIO® Wall Mounted (Gen 1) unit.

4.2 Installation instructions

The installer must mount the W-BACnet module inside the AIO® unit, in a location that meets both of the following conditions:

- Is near enough to the GWX gateway to connect the module's wires to the gateway, and
- Is near the bottom of the unit or another place where the module is not completely enclosed by metal panels.

It is important not to install the module inside a fully enclosed metal compartment, including right next to the gateway where there is no exposure to the outside of the unit, since metal panels can shield the wireless signal and reduce the module's communication range.

For complete installation instructions, refer to the AIO® Wireless BACnet Module (W-BACnet) Installation Guide.

4. WIRING

Figure 2. W-BACnet module wiring connections to GWX

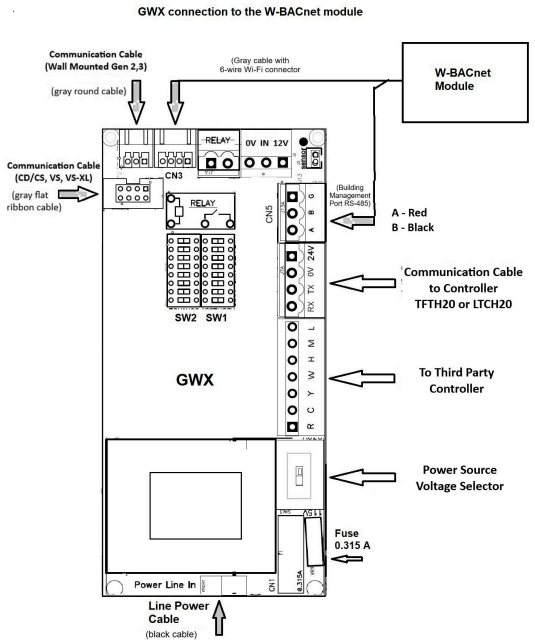

With over 20 years of experience in the climate comfort sector, we have a clear goal: growth through innovation. Our team is laser-focused on the conception, development, and production of innovative heating, ventilation, and air conditioning solutions. This mission has developed through bringing together technical skills, creativity, technology, design, Italian passion, and a global vision to achieve the best energy efficiency and performance.

innova.co | **USA:** 216-710-1000 **Canada:** 416-739-1000

MADE IN ITALY

© 2026 INNOVA. All rights reserved.

Revised August 22, 2026

AIO® Wireless BACnet Module (W-BACnet)
Product Data Sheet