SUNVENT LLA LOUVERS

MODEL “LLA/C-H” with 4” deep frame, concealed 1” Flange and 2 Connections

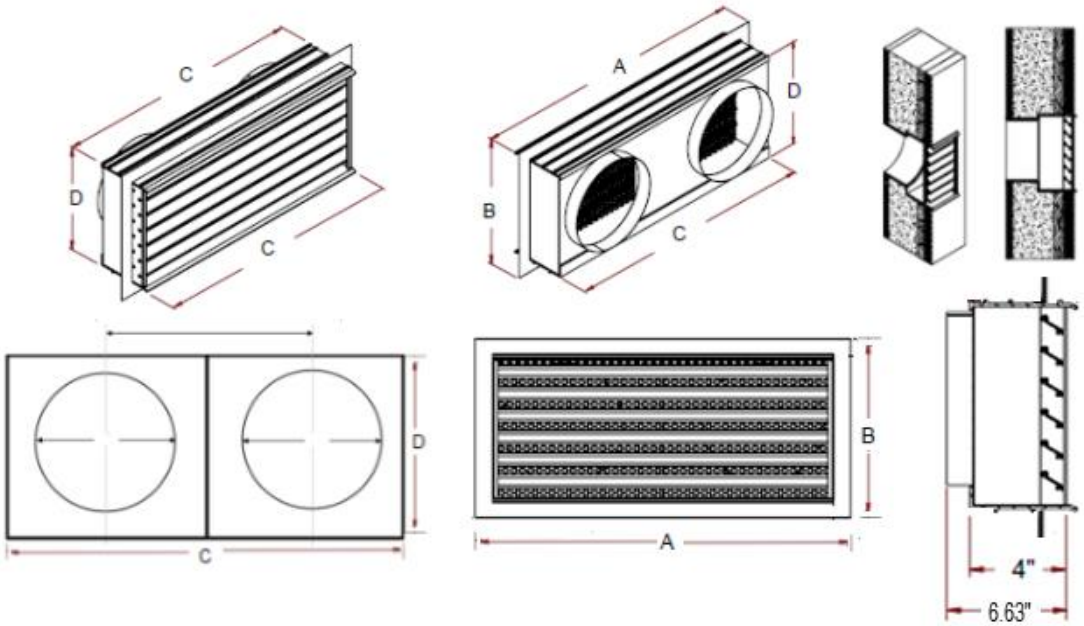

* Placement from front face

AIO Model	Collar	LLA Model	A	B	C	D	Opening Required	Centers	Qty	Flange*
Wall	7	LLA/C-H 7W	21.63	10.38	19.63	8.5	19.88”W x 8.75”H	11.53		
Wall	8	LLA/C-H 8W	22.63	11.38	20.63	9.5	20.88”W x 9.75”H	11.53		
Wall Pro	9	LLA/C-H 9W	23.63	12.38	21.63	10.5	21.88”W x 10.75”H	11.53		
Ceiling Ducted with ERV	8	LLA/C-H 8C ERV	27.25	11.38	25.25	9.5	25.5”W x 9.75”H	12.94		
Ceiling Ducted without ERV	8	LLA/C-H 8C	27.25	11.38	25.25	9.5	25.5”W x 9.75”H	11.13		
Ceiling Suspended with ERV	8	LLA/C-H 8CS ERV	27.25	11.38	25.25	9.5	25.5”W x 9.75”H	12.94		
Ceiling Suspended without ERV	7	LLA/C-H 7CS	27.25	11.38	25.25	9.5	25.5”W x 9.75”H	16.75		

FINISH:

- **VENT FRAME**: Extruded aluminum to be 6063 - T5 Alloy, Minimum .125” thick
- **BLADES**: Ext. alum 6063-T5, Min .063” thick, 1”D set at 30° angle, 1.25” on center
- **FLANGE**: 1” Sheet Metal Flange
- **REAR PLATE**: 28 ga. galv. steel w/divider between round collars
- **SCREENS**: Aluminum Hexagon (0.032 ga. 0.25" Holes on 0.28" Staggered Centers, 79% Open Area)
- **UL RATING**: NONE

SUNVENT INDUSTRIES
div of SYLRO SALES CORP.
1 Industrial Drive, #26
Pelham NH, 03076
Ph: 603-595-4556
info@sunventindustries.com

Project:	**Contractor**:
Location:	**Agent**:
Architect:	**Date**: