SUNVENT LLA LOUVERS

MODEL “LLA/F-E” with Transition Box” Vent with 1” Front Flange and 2 Connections on Right Side

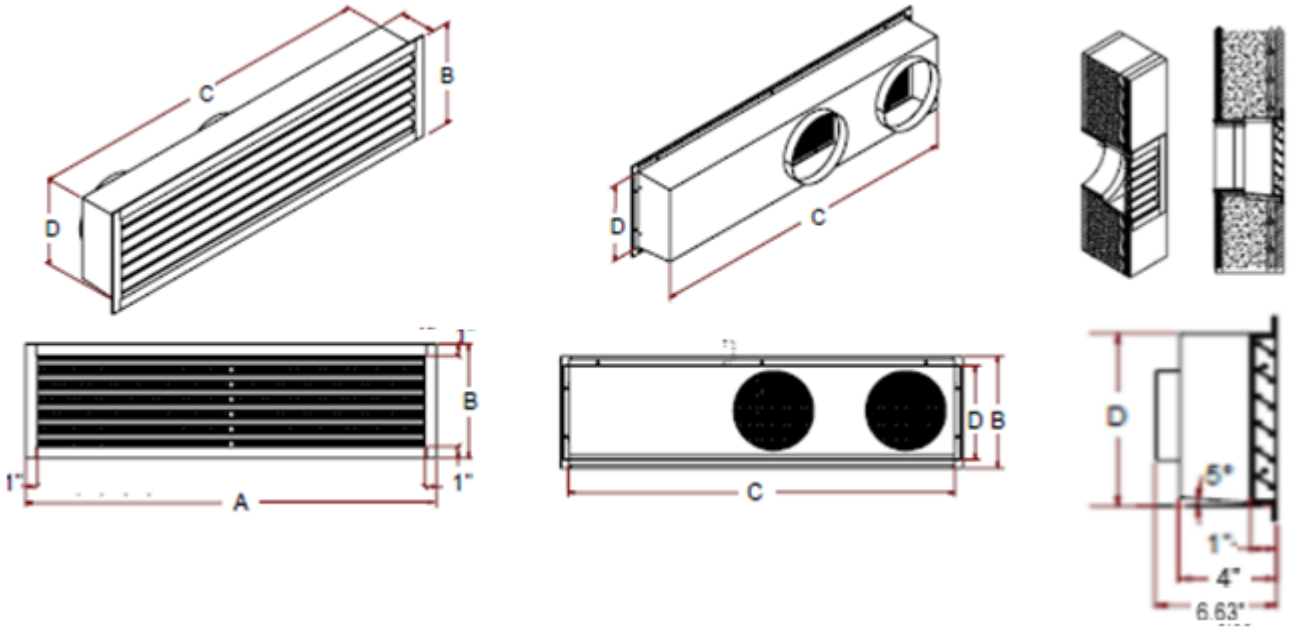

AIO Model	Collar	LLA Model	A	B	C	D	Opening Required	Centers	Qty
Wall	7	LLA/F-E 7W	35.06	9.88	33.56	8.13	33.81”W x 8.38”H	11.53	
Wall	8	LLA/F-E 8W	36.06	10.88	34.56	9.13	34.81”W x 9.38”H	11.53	
Wall Pro	9	LLA/F-E 9W	37.06	11.88	35.56	10.13	35.81”W x 10.38”H	11.53	
Ceiling Ducted with ERV	8	LLA/F-E 8C ERV	39.9	10.88	38.4	9.13	38.65”W x 9.38”H	12.94	
Ceiling Ducted without ERV	8	LLA/F-E 8C	39.9	10.88	38.4	9.13	38.65”W x 9.38”H	11.13	
Ceiling Suspended with ERV	8	LLA/F-E 8CS ERV	39.9	10.88	38.4	9.13	38.65”W x 9.38”H	12.94	
Ceiling Suspended without ERV	7	LLA/F-E 7CS	39.9	10.88	38.4	9.13	38.65”W x 9.38”H	16.75	

FINISH:

- **VENT FRAME**: Extruded aluminum to be 6063 - T5 Alloy, Minimum .125” thick, with 1” Front Flange
- **BLADES**: Extruded aluminum to be 6063-T5, Min .063” thick, 1”D set at 30° angle, 1.25” on center
- **BOX**: 28 ga. galv. steel w/divider between round collars, with 5° slope from back to front with 0.5” bend at bottom.
- **SCREENS**: Aluminum Hexagon (.032 ga. .25" Holes on .28" Staggered Centers, 79 % Open Area)
- **UL RATING**: None

SUNVENT INDUSTRIES
div of SYLRO SALES CORP.
1 Industrial Drive, #26
Pelham NH, 03076
Ph: 603-595-4556
info@sunventindustries.com

Project:	**Contractor**:
Location:	**Agent**:
Architect:	**Date**: