nextac

Product Data Sheet

Model P



innova

CONTACT INFO

VIP Customer/Technical Support
Email: vip@innova.co
Phone: (212) 204-2700

DISCLAIMER

This documentation is intended for informational use only and should not be construed as a binding representation or contract. This documentation is provided "as is" without warranty of any kind, either express or implied. INNOVA and its affiliates disclaim all liability arising from the use or misuse of this documentation.

Illustrations may not be to scale, and all information and dimensions stated herein are subject to change at any time at the sole discretion of INNOVA. Benefits described herein apply only to the extent that the product is installed correctly in the correct application and used for its intended purpose.

INNOVA is constantly innovating and improving its products and reserves the right to modify product design and specifications without notice and without incurring any obligations.

MODEL NUMBER NOMENCLATURE

The code identifies the family, model, version, size, voltage, accessories, refrigerant type, and ERV option. See the diagram below for details.

Figure 1. Nextac Model P nomenclature

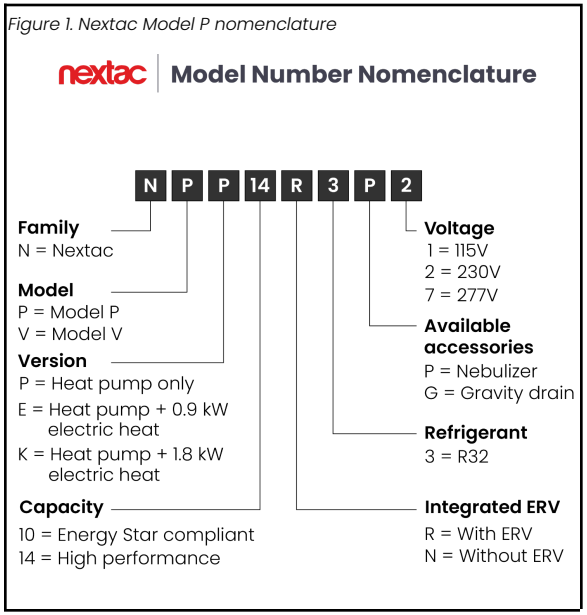

Copyright © 2026 INNOVA. All rights reserved.

CONTENTS

1. READING THIS DOCUMENTATION..... 4

1.1 Documentation-specific language..... 4

1.2 Annotation icons..... 4

2. NEXTAC MODEL P OVERVIEW..... 4

2.1 Components and structure..... 4

2.2 Standard features..... 5

2.3 Optional features..... 5

2.4 Accessory and control options..... 5

3. AIRFLOW..... 6

3.1 Airflow operation..... 6

3.2 Airflow diagram (front view)..... 6

3.3 Airflow diagram (rear view)..... 6

4. INSTALLATION REQUIREMENTS..... 7

4.1 Low Ambient Heating Configuration Requirement..... 7

4.2 Cold Climate Condensate Drain Requirement 7

4.3 Site requirements..... 7

4.4 Louver requirements..... 7

4.5 Clearance requirements..... 8

5. ELECTRICAL, CONTROLLER, AND DRY CONTACT CONNECTIONS..... 8

6. TECHNICAL SPECIFICATIONS..... 9

6.1 High Performance..... 9

6.1.1 Cooling..... 9

6.1.2 Heating (Heat Pump Only)..... 9

6.2 Energy Star compliant..... 10

6.2.1 Cooling..... 10

6.2.2 Heating (Heat Pump Only(a))..... 10

6.3 Operating temperature limits..... 10

6.4 ERV..... 10

6.4.1 General..... 10

6.4.2 Performance..... 11

6.5 Airflow..... 11

6.5.1 Indoor air fan..... 11

6.5.2 Outdoor air fan..... 11

6.5.3 Fresh air intake/stale air exhaust fans (on units with ERV)..... 11

6.6 Sound..... 11

6.7 General..... 11

6.7.1 Control options..... 11

6.7.2 Modes..... 11

6.7.3 Condensate pipe..... 11

6.7.4 Physical..... 11

6.7.5 Compressor..... 11

6.8 Electrical..... 12

6.8.1 General..... 12

6.8.2 Motors..... 12

6.8.3 Optional Power Cord Accessory..... 12

7. WIRING DIAGRAMS..... 13

7.1 230V Heat pump only..... 13

7.2 230V Heat pump + 1.8 kW electric heat..... 13

8. DIMENSIONS..... 14

8.1 Nextac Model P unit only (without optional wall sleeve)..... 14

8.2 Nextac Model P unit with optional wall sleeve installed..... 14

9. WARRANTY..... 14

9.1 Basic Coverage..... 14

9.2 Optional Extended Coverage..... 14

9.3 Validation Requirements..... 14

10. GLOSSARY..... 15

1. READING THIS DOCUMENTATION

Some language and symbols in this documentation have specific meanings.

1.1 Documentation-specific language

Reference to the product
Any reference to **the unit** refers to the Nextac Model P unit.

Unit orientation
All directions in this guide (left, right, top, bottom) are given from the perspective of facing the unit as installed in the wall opening.

1.2 Annotation icons

Annotations are provided throughout this guide. It is essential to read each carefully and follow the instructions stated.

Indicates critical information for correct operation or installation.

Indicates supplemental information, tips, or useful background information.

2. NEXTAC MODEL P OVERVIEW

The Nextac Model P is a packaged terminal heat pump (PTHP) engineered for efficient, quiet operation and simple installation. It uses a twin-rotary BLDC inverter compressor and can include an optional energy recovery ventilator (ERV) that delivers up to 50 CFM (85.0 m^3/hr) of fresh, filtered air. The ERV's Recovery + feature transfers energy from exhaust air to improve condenser efficiency and reduce system load.

The unit provides up to 15,000 BTU/h of heating or cooling at peak output. Thermal and acoustic barriers maintain room comfort while keeping noise as low as 27 dBA. Operating modes include cooling, heating, dehumidification, auto, and night, with selectable fan speeds and programmable outside air intake. Air quality is maintained through a four-stage filtration system: a washable MERV 3 (or optional MERV 13) return filter, plus ERV-stage MERV 3 and MERV 13 filters for incoming and exhaust air. Return air and stale air filters are easily removable for maintenance.

Designed to fit any standard PTAC wall sleeve, the Model P includes a compact, paintable all-metal case, efficient condensate management, and high-efficiency ECM fans with auto external static pressure control. Large C- and V-shaped coils and R32 refrigerant maximize performance. Control options include the onboard touch controller, wall-mounted controllers, third-party thermostats, and BACnet/Modbus integration. An auto-restart function restores operation after a power loss. Units are available in 230V and 277V models and are covered by a 10-year limited warranty.

2.1 Components and structure

Figure 2 Nextac Model P components and structure

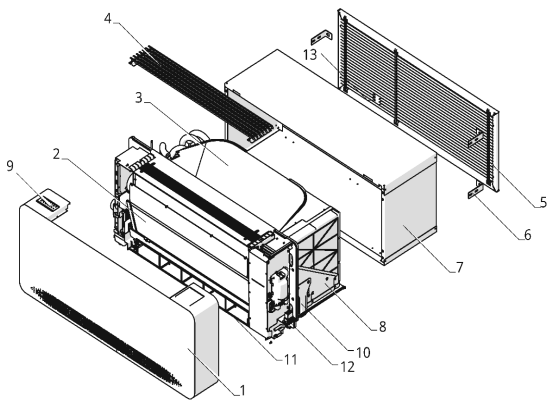

1	Front panel	**8**	ERV core (optional accessory)
2	Internal heat exchanger coils	**9**	Onboard touch controller
3	External heat exchanger coils	**10**	Wheel accessory brackets (not included)
4	Upper supply grille	**11**	Return air filter
5	External louver (optional accessory)	**12**	Electrical connection terminal
6	External louver mounting brackets (optional accessory)	**13**	External louver opening for nebulizer nozzle (optional accessory)
7	Wall sleeve (optional)		

2.2 Standard features

- Silent operation at up to 27 dBA.
- Compact, sleek, and slim design.
- Durable, paintable all-metal case.
- Cooling, heating, dehumidification, auto, and night modes.
- Selectable fan speeds: low, medium, high, and auto.
- Programmable condenser air intake.
- Efficient condensate disbursement system.
- Washable filters for return and condenser air intake.
- Sound and thermal barriers.
- Onboard touch controller that dims after 15 seconds of inactivity.
- Auto-restart after a power outage.
- Compatible with any standard PTAC wall sleeve.
- Available in two power options: 230 V and 277 V.
- Uses environmentally friendly R32 refrigerant.
- Twin-rotary BLDC inverter compressor.
- High-performance ECM fans for recirculated indoor air and condenser air intake and exhaust.
- Extra-large C- and V-shaped heat exchangers for improved efficiency.
- 10-year limited warranty.

2.3 Optional features

- ERV module: Delivers up to 50 CFM (85.0 m^3/hr) of fresh air circulation with Recovery+ technology and includes high-performance ECM fans for fresh and stale air flow.
- Integrated nebulizer that disperses condensate to the exterior.
- 1.8 kW (6,100 BTU/H) electric heat with two 900 W heat strips.
- ThermaSleeve™ shield for enhanced insulation.
- Coil corrosion protection.
- Quick-connect whip cord or LCDI cord options (230 V units).
- Compatible controllers, including third-party thermostats.
- Extended warranty option up to 15 years.

2.4 Accessory and control options

Table 1: Accessories and control options

Part	Optional Items	
	Factory Installed	Field Installed
ERV module	✓	
1.8 kW electric heat	✓	
Quick-connect whip cord		✓
LCDI power cord (2 sizes)		✓
MERV 13 Filters		✓
Condensate pump/nebulizer system		✓
PTAC wall sleeve with thermal barriers		✓
Hex wrench (for securing the unit to the wall sleeve)		✓
External louver with an opening for the nebulizer nozzle		✓
Louver fixing brackets		✓
Wireless remote controller (WRCH20)		✓
Basic touch controller (LTCH20)		✓
Advanced TFT controller (TFTH20)		✓
Wall-mounted wireless Infrared controller (WIPT20)		✓
Third-party gateway (MOD TPG)		✓
Wi-Fi chip		✓

3. AIRFLOW

3.1 Airflow operation

Recirculated supply air
The supply air is released through a fixed top grille.

Recirculated return air
The return air is drawn through the integrated return air grille and filter located at the bottom of the unit.

Condenser air intake
The condenser air intake connection is compatible with any of the approved or custom louvers, provided they meet the minimum requirements. For more information, see Section 4.4.

Condenser air exhaust
The condenser air exhaust connection is compatible with any of the approved or custom louvers, provided they meet the minimum requirements. For more information, see Section 4.4.

Fresh air intake and exhaust (for units with an ERV)
The fresh air intake enters through the same louver as the condenser air intake, passes through the ERV, and exits through an opening to the right of the supply air grille.

Stale air intake and exhaust (for units with an ERV)
The stale air intake enters through an opening to the right of the return air grille, passes through the ERV, and exits through the same louver as the condenser air exhaust.

- A divider separates the condenser intake and exhaust vents. To create an airtight seal, apply open-cell insulation tape to the divider.
- When the bathroom exhaust is connected to the ERV exhaust port, adhere to local codes and jurisdictional requirements for the minimum separation distance between exhaust and intake termination points.

3.2 Airflow diagram (front view)

Figure 3. Nextac Model P airflow (front view)

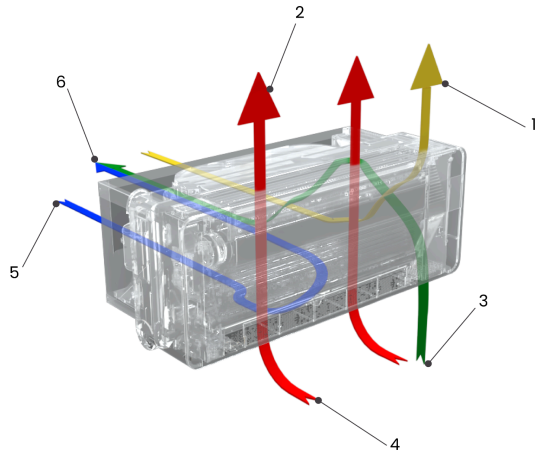

1	Fresh air exhaust (for units with ERV)	**4**	Recirculated return air
2	Recirculated supply air	**5**	Condenser air intake
3	Stale air intake (for units with ERV)	**6**	Condenser and stale air exhaust

3.3 Airflow diagram (rear view)

Figure 4. Nextac Model P airflow (rear view)

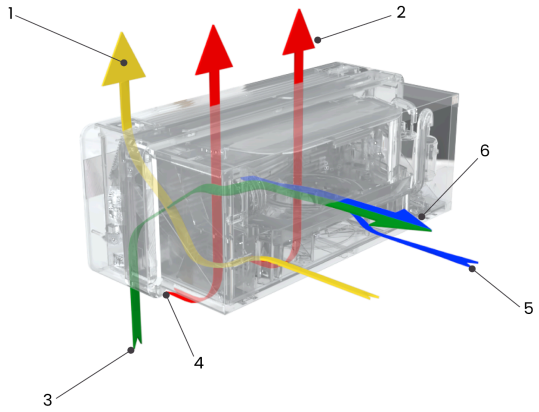

1	Fresh air (for units with ERV)	**4**	Recirculated return air
2	Recirculated supply air	**5**	Condenser air intake
3	Stale air intake (for units with ERV)	**6**	Condenser and stale air exhaust

4. INSTALLATION REQUIREMENTS

4.1 Low Ambient Heating Configuration Requirement

To configure the unit for electric resistance heating in low ambient conditions:

1. Press and hold **Power** for 10 seconds to enter the **User Menu**.
2. Press and hold **+** and **–** simultaneously for 10 seconds to enter the **Installer Menu**.
3. Use **+** / **–** to scroll to **HE**, then press **Power**.
4. Use **+** / **–** to select **RT**, then press **Power** to save (save icon appears).
5. When returned to the main screen, press **A**, then press **A** again.

This setting shifts the unit to electric resistance heating during low ambient conditions, preventing heat pump operation that may contribute to ice formation.

4.2 Cold Climate Condensate Drain Requirement

For installations in cold or northern climates, a condensate drain line heater is required.

Use of a drain line heater is standard industry practice and is necessary to prevent condensate freezing during low ambient operation. Failure to install a drain line heater may result in ice formation and improper unit operation.

Abnormally low ambient temperatures may increase the risk of freezing even when the unit is properly configured.

4.3 Site requirements

Refer to the Installation Guide for complete installation requirements and specifications.

- Always consult local and national electrical codes before installing the unit.
- Damage or premature failure of the quoted equipment resulting from improper voltage conditions, inadequate electrical service, or operating the equipment with excessive THD (Total Harmonic Distortion) levels will void the Manufacturer's warranty.

- Do not operate the unit in or near a construction or renovation site. Dust and debris can enter the unit, causing malfunctions and reduced performance.
- If the unit must be operated during construction or renovation, the air filters and accessible coil surfaces must be inspected and cleaned daily before operation.
- Failure to perform daily cleaning during construction use may result in damage and will void the warranty.

- [ ] Use the (optional) INNOVA wall sleeve whenever possible. When using a wall opening with an existing PTAC wall sleeve, ensure that the unit is installed properly and secured according to the guidelines in the Installation Guide.
- [ ] Ensure that the mounting wall can support the unit's weight.
- [ ] Ensure that one of the following electrical setups is available at the installation site:
  - **Grounded electrical outlet:** A grounded, rated outlet located at the wall sleeve's bottom-right, set 4" (101.6 mm) off the wall sleeve, with no cord tension.
  - **In-wall hardwiring:** A wall prepared for hardwiring with the (optional) quick-connect whip cord. The access point must align with the electrical connection area at the bottom right front of the unit and be within 40" (1016 mm) of the unit (the whip cord length).
- [ ] The Nextac Model P unit comes with an optional nebulizer system that expels condensate outdoors. However, a plumbed drainage system is always recommended for long-term reliability. If a plumbed drain or direct exterior drain is used instead of the condensate disbursement system, ensure that a suitable method is available:
  - **Plumbed drain (recommended):** Confirm that it is safe and feasible to connect the unit's rubber drain hose to a concealed drainpipe within the wall that leads to the building's wastewater system; or
  - **Direct exterior drain:** Ensure that the drain hose can safely discharge condensate outside, either onto the ground or through an extended exterior drainpipe or hose, without causing water damage or violating local codes.
- [ ] All responsible parties must verify that the electrical supply is properly grounded, free of excessive electrical noise, and within the specified voltage and frequency limits before energizing the unit. Failure to correct power quality issues, including voltage instability or electrical noise, may result in equipment damage and will void the warranty for affected components.

4.4 Louver requirements

While the unit includes an optional external louver, you may also use a separate architectural louver. In that

case, the louver must meet the following requirements:

- **Free area:** The louver must provide at least 2.3 ft^2 (0.21 m^2) of free area to ensure sufficient airflow to the heat exchanger chamber.
- **Pressure drop:** The louver must not create more than 0.25 in. WC (62.2 Pa) of pressure drop. Higher resistance can trap heat in the condenser, causing the compressor to overheat and shut down.

Any louver must meet these requirements. Exceeding these limits can cause the unit to overheat and fail, and will void the warranty.

4.5 Clearance requirements

Table 2: Clearance requirements

Unit Side	Clearance
Top	20" (508 mm)
Bottom	4.5" (114 mm)
Front	15" (381 mm)
Rear	3" (914 mm)
Left and Right	4" (101 mm)

Figure 5. Nextac installation clearances (front view)

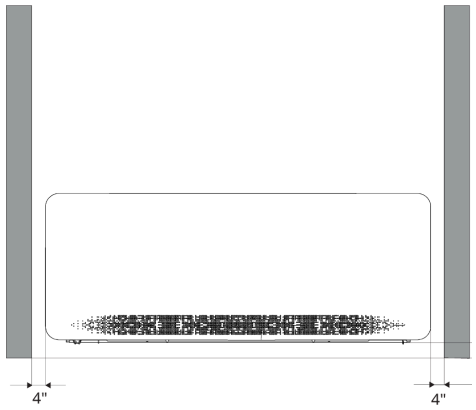

Figure 6. Nextac installation clearances (side view)

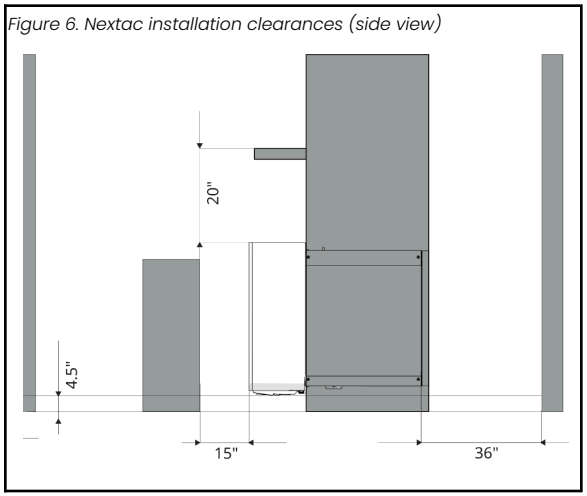

5. ELECTRICAL, CONTROLLER, AND DRY CONTACT CONNECTIONS

The Nextac Model P includes a connection terminal block on the bottom-right side of the unit. It provides dedicated ports for the optional LCDI/quick-connect whip cords, controller gateways, third-party thermostats, and dry contact devices.

Power cord connections

The Nextac Model P unit (for 230V units) can be easily connected to the power supply using the LCDI power cord or quick-connect whip cord. They connect via the TE 1-917809-3 power connector at the bottom right of the front panel, as shown in Figure 7 below.

Figure 7. TE 1-917809-3 power connector location

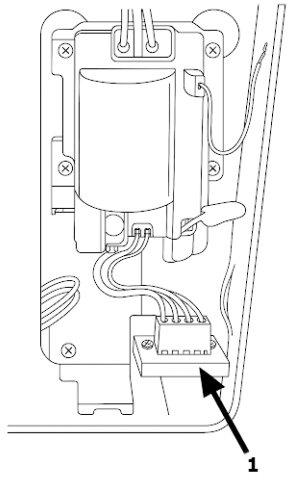

1	TE 1-917809-3 power connection

Controller gateways

Ports to connect (optional) INNOVA-supplied gateways. The gateway plugs directly into the unit's terminal block and provides the interface for advanced touch controllers, basic touch controllers, BACnet, Modbus, Wi-Fi app, and other control options.

Third-party thermostats
Third-party thermostats connect to the unit only through one of the INNOVA-supplied gateways.

The gateway includes three fan-speed inputs (low, medium, high). To maximize efficiency, use a thermostat that supports three fan speeds.

Dry contact connections
Two screw terminals on the connection block accept support voltage-free switch inputs for controlling the unit. Typical connected devices include occupancy sensors, open-window switches, on/off remotes, and other compatible systems. For detailed wiring and configuration instructions, see the Installation Guide.

6. TECHNICAL SPECIFICATIONS

6.1 High Performance

6.1.1 Cooling

Table 3: AHRI performance - cooling mode

			95°F (35°C) (1)	105°F (40.6°C) (2)	115°F (46.1°C) (3)
Capacity	Maximum (a)	BTU/H	17000	15500	14000
	Design (b)		12500	10400	10000
	Rated		11500	11500	11500
	Minimum		4500	4000	4000
Input Power	Maximum	W	2050	1900	2000
	Design		965	1060	1160
	Rated		955	1210	1350
	Minimum		330	410	480
Efficiency	Maximum	EER2	8.5	7.5	6.6
	Design		11.5	9.8	8.2
	Rated		12	9.5	7.7
	Seasonal (c)	SEER2	16	-	-
Moisture removal		Pts/h	2.4	2.9	3.4
		L/hr	1.1	1.4	1.6

Notes:
(1) ID: 80°F(26.7°C) DB, 67°F(19.4°C) WB | OD: 95°F(35°C) DB, 75°F(23.9°C) WB

(2) ID: 80°F(26.7°C) DB, 67°F(19.4°C) WB | OD: 105°F(40.6°C) DB, 75°F(23.9°C) WB

(3) ID: 80°F(26.7°C) DB, 67°F(19.4°C) WB | OD: 115°F(46.1°C) DB, 75°F(23.9°C) WB

(a) Indicates the compressor's highest output. Not intended for system design and is meant only for limited-time operation at the upper limit.

(b) Represents the recommended capacity for sizing the unit to the space.

(c) PTHPs tested under AHRI 380 are not assigned a SEER2 rating. The value shown is provided for comparison with heat pumps rated under AHRI 210/240.

6.1.2 Heating (Heat Pump Only)

The table shows Heat Pump performance only. An electric heating element can be added to provide an additional output of 6,100 Btu/h.

Table 4: AHRI Performance - heating mode

			47°F (8.3°C) (1)	17°F (-8.3°C) (2)	5°F (-15°C) (3)	0°F (-17.8°C) (4)	-5°F (-20.6°C) (5)
Capacity	Maximum (a)	Btu/h	15500	13000	10000	9000	8500
	Design (b)		12500	11500	9000	8500	8500
	Rated		11500	11500	6500	6500	6500
	Minimum		4000	3000	2700	2400	2000
Power input	Maximum	W	1420	1650	1320	1290	1310
	Design		1040	1280	1240	1230	1310
	Rated		900	1280	1000	1040	1030
	Minimum		300	380	370	350	350
Efficiency	Maximum	COP	3.2	2.3	2.1	2	1.9
	Design		3.6	2.5	2.12	2	1.9
	Rated		3.8	2.5	2.2	2.06	1.95
	Minimum		4.14	2.3	2.3	2	1.8
	Seasonal	HSPF2	8	-	-	-	-

Notes:

(1) ID: 70°F(21.1°C) DB, 60°F(15.6°C) WB | OD: 47°F(8.3°C) DB, 43°F(6.1°C) WB

(2) ID: 70°F(21.1°C) DB, 60°F(15.6°C) WB | OD: 17°F(-8.3°C) DB, 13°F(-10.6°C) WB

(3) ID: 70°F(21.1°C) DB, 60°F(15.6°C) WB | OD: 5°F(-15°C) DB, 3°F(-16.1°C) WB

(4) ID: 70°F(21.1°C) DB, 60°F(15.6°C) WB | OD: 0°F(-17.8°C)

(5) ID: 70°F(21.1°C) DB, 60°F(15.6°C) WB | OD: -5°F(-20.6°C)

(a) Indicates the compressor's highest output. Not intended for system design and is meant only for limited-time operation at the upper limit.

(b) Represents the recommended operating point that balances efficiency and performance. Use this value for system design.

6.2 Energy Star compliant

6.2.1 Cooling

Table 5: Energy Star performance - cooling mode

			95°F (35°C) (1)	105°F (40.6°C) (2)	115°F (46.1°C) (3)
Capacity	Maximum (a)	Btu/h	15000	13000	11500
	Design (b)		11500	9500	8500
	Rated		8500	8500	8500
	Minimum		4500	4000	4000
Input Power	Maximum	W	1900	1570	1350
	Design		955	940	970
	Energy Star		640	810	970
	Minimum		330	410	480
Efficiency	Maximum	EER	8.8	8.2	7.7
	Design		12	10.1	8.4
	Rated		13.1	10.5	8.4
	Seasonal	SEER2	16.7	-	-
	Moisture removal	Pts/h	1.9	2.4	2.9
		L/hr	0.9	1.1	1.4

Notes:

(1) ID: 80°F(26.7°C) DB, 67°F(19.4°C) WB | OD: 95°F(35°C) DB, 75°F(23.9°C) WB

(2) ID: 80°F(26.7°C) DB, 67°F(19.4°C) WB | OD: 105°F(40.6°C) DB, 75°F(23.9°C) WB

(3) ID: 80°F(26.7°C) DB, 67°F(19.4°C) WB | OD: 115°F(46.1°C) DB, 75°F(23.9°C) WB

(a) Indicates the compressor's highest output. Not intended for system design and is meant only for limited-time operation at the upper limit.

(b) Represents the recommended operating point that balances efficiency and performance. Use this value for system design.

6.2.2 Heating (Heat Pump Only(a))

Table 6: AHRI Performance - heating mode

			47°F (8.3°C) (1)	17°F (-8.3°C) (2)	5°F (-15°C) (3)	0°F (-17.8°C) (4)	-5°F (-20.6°C) (5)
Capacity	Maximum (b)	Btu/h	12500	11000	9000	9000	8500
	Design (c)		10000	8500	8000	7500	8500
	Rated		8500	8500	6500	6500	6500
	Minimum		4000	3000	2700	2400	2000
Power input	Maximum	W	1040	1210	1240	1290	1310
	Design		700	1400	1190	1120	1310
	Rated		610	870	1000	1040	1030
	Minimum		300	380	370	350	350
Efficiency	Maximum	COP	3.6	2.6	2.12	2	1.9
	Design		3.9	2.4	2.15	2.04	1.9
	Rated		4	2.7	2.2	2.06	1.95
	Minimum		4.14	2.3	2.3	2	1.8
	Seasonal	HSPF2	8	-	-	-	-

Notes:

(1) ID: 70°F(21.1°C) DB, 60°F(15.6°C) WB | OD: 47°F(8.3°C) DB, 43°F(6.1°C) WB

(2) ID: 70°F(21.1°C) DB, 60°F(15.6°C) WB | OD: 17°F(-8.3°C) DB, 13°F(-10.6°C) WB

(3) ID: 70°F(21.1°C) DB, 60°F(15.6°C) WB | OD: 5°F(-15°C) DB, 3°F(-16.1°C) WB

(4) ID: 70°F(21.1°C) DB, 60°F(15.6°C) WB | OD: 0°F(-17.8°C)

(5) ID: 70°F(21.1°C) DB, 60°F(15.6°C) WB | OD: -5°F(-20.6°C)

(a) The table shows Heat Pump performance only. An electric heating element can be added to provide an additional output of 6,100 Btu/h.

(b) Indicates the compressor's highest output. Not intended for system design and is meant only for limited-time operation at the upper limit.

(c) Represents the recommended operating point that balances efficiency and performance. Use this value for system design.

6.3 Operating temperature limits

These values define the allowable temperature ranges within which the system can operate safely and efficiently. Exceeding these limits — whether in cooling or heating mode — may result in reduced performance, system shutdown, or potential damage to the system. **Room T** refers to the indoor or surrounding temperature at the location where the system is installed, while **External T** refers to the outdoor air temperature to which the system is exposed.

Table 7: Operating temperature limits - cooling, heating

		Room T	External T
Cooling Mode	Max Temp	95°F (35°C)	115°F (46.1°C)
	Min Temp	64°F (17.8°C)	23°F (-5°C)
Heating Mode	Max Temp	81°F (27.2°C)	77°F (25°C)
	Min Temp	41°F (5°C)	-10°F (-23.3°C) [-13°F (-25°C) with electric heat]

6.4 ERV

6.4.1 General

Table 8: ERV data - general

Flow type	Counterflow enthalpy exchanger
Material	Mold and bacteria-resistant, washable polypropylene membrane
ASHRAE compliance	62.1 and 62.2
Fresh air intake filter	MERV 3
Fresh air supply filter	MERV 13
Stale air intake filter	MERV 13

6.4.2 Performance

Table 9: ERV data - performance

	20 CFM (34.0 m^3/hr)	30 CFM (51.0 m^3/hr)	45 CFM (76.5 m^3/hr)
Core efficiency in winter (sensible)(1)	81.7 %	77.9 %	72.8 %
Core efficiency in winter (latent)(1)	58.1 %	54.5 %	48.5 %
Core efficiency in summer (sensible)(2)	68.1 %	64.3 %	59.1 %
Core efficiency in summer (latent)(2)	57.5 %	53.7 %	47.3 %
Internal leakage at 0.40" WC (99.6 Pa)	2.6 %	2.4 %	2.2 %
External leakage at 1.0" WC (249.1 Pa)	2.8 %	2.7 %	2.5 %

Notes:

(1) Temperature of fresh air in: 63°F (17.2°C)

(2) Temperature of fresh air in: 84°F (28.9°C)

6.5 Airflow

6.5.1 Indoor air fan

Table 10: Airflow data - indoor air fan

Motor type	ECM tangential
CFM range	160-400
m^3/hr range	272-680
Speeds	Low, medium, high, auto
Level 1 - Low	160
Level 2 - Medium	310
Level 3 - High	400
Boost (Temporary)	630
Filter type	MERV 3 (optional MERV 13)

6.5.2 Outdoor air fan

Table 11: Airflow data - outdoor air fan

Motor type	ECM backward curved centrifugal
CFM range	210-850
m^3/hr range	357-1444

6.5.3 Fresh air intake/stale air exhaust fans (on units with ERV)

Table 12: Airflow data - fresh air intake fan

Motor type	ECM axial
CFM range	20-45
m^3/hr range	34-76
Speeds	Based on selected CFM
Filter type	MERV 13

6.6 Sound

Table 13: Sound data

Indoor	dB(A)(1)	29-49
	STC	40
	OITC	35
Outdoor	dB(A)(1)	28 - 55

Notes:

(1) Internal sound pressure is measured in a semi-anechoic chamber at a distance of 6.5' (165.1 mm) and calculated according to EN 12102.

6.7 General

6.7.1 Control options

Table 14: General data - control options

Basic functionality	Dependent on the controller
Wi-Fi	Optional
ADA compliant	Requires a wall-mounted controller (available as an optional accessory)

Dry contact	Yes

6.7.2 Modes

Table 15: General data - modes

Operation	For models with ERV: Cool+Fresh Air, Cool Only, Heat+Fresh Air, Heat Only, Auto, Night Mode
	For models without ERV: Cool, Heat, Auto, Night Mode
Available restricted modes	Heat only, Cool only, Temperature limiting
Timers	Dependent on the controller

6.7.3 Condensate pipe

Table 16: General data - condensate pipe

Size	3/4" (19 mm) outside diameter
Material	Rubber

6.7.4 Physical

Table 17: General data - physical

Dimensions (visible part)	45.1" W x 5.7" D x 17.5" H
	1146 mm W x 145 mm D x 446 mm H
Dimensions (in-sleeve)	42.0" W x 14.6" D x 16.0" H
	1067 mm W x 371 mm D x 406 mm H
Net weight	145 lbs (65.8 kg)
Weight with wall sleeve	155 lbs (70.3 kg)
Cabinet finish	RAL 9003 signal white
Cabinet material	Steel

6.7.5 Compressor

Table 18: General data - compressor

Type	BLDC twin rotary inverter
Refrigerant type	R32
Refrigerant quantity	31.04 Oz (879.9 g)
Oil type	Fv50s (ISO 50) Polyvinylether (PVE)

6.8 Electrical

6.8.1 General

Models with heat pump only

Table 19: Electrical data - models with heat pump only

		High Performance				Energy Star Compliant			
		115 V	208 V	230 V	265 V	115 V	208 V	230 V	265 V
Power supply	Ph/ Hz	1/60							
Power factor		0.96							
Input power - standby	W	10.8							
Input power - off mode	W	1.5							
Running amps cooling	A	8.4	4.6	4.2	3.6	5.6	3.1	2.8	2.4
Maximum amps cooling	A	17.8	9.9	8.9	7.7	15	9.1	8.3	7.2
Running amps heating	A	7.8	4.3	3.9	3.4	5.4	2.9	2.7	2.3
Maximum amps heating	A	12.4	6.8	6.2	5.4	9	5.0	4.5	3.9
MCA	A	23	12	11	9	19	10	9	8
MOCP	A	35	20	20	15	30	15	15	15

Models with heat pump + 1.8 kW electric heat (0.9 kW for 115 V model)

Table 20: Electrical data - models with electric heat

		High Performance				Energy Star Compliant			
		115 V	208 V	230 V	265 V	115 V	208 V	230 V	265 V
Power supply	Ph/Hz	1/60							
Power factor		0.96							
Input power - standby	W	10.8							
Input power - off mode		1.5							
Running amps cooling	A	8.4	4.6	4.2	3.6	5.6	3.1	2.8	2.4
Maximum amps cooling		17.8	9.9	8.9	7.7	15	9.1	8.3	7.2
Running amps heating		7.8	4.3	3.9	3.4	5.4	2.9	2.7	2.3
Maximum amps heating - Heat Pump only		12.4	6.8	6.2	5.4	9	5.0	4.5	3.9
Maximum amps heating - Heat Pump + Electric Heat		20	15	14	12	17	14	12	11
MCA		26	19	18	15	22	17	15	13
MOCP		40	25	20	20	30	20	20	15

6.8.2 Motors

Table 21: Electrical data - motors

Indoor ECM fan motor	Max W	W	65
	FLA	A	0.4
	Power	HP	0.07
Outdoor ECM fan motor	Max W	W	150
	FLA	A	1.3
	Power	HP	0.2
Fresh air ERV fan motor	Max W	W	150
	FLA	A	0.8
		HP	0.20
Stale air ERV fan motor	Max W	W	190
	FLA	A	0.8
	Power	HP	0.26

In accordance with UL 60335-2-40, motor compressor ratings for RLA and LRA are determined in accordance with Annex 101.DVB. For motor-compressors controlled by an adjustable speed drive, RLA and LRA are replaced with the rated input current of the power conversion equipment.

6.8.3 Optional Power Cord Accessory

Table 22: Electrical data - power cord

			Heat pump only	Heat pump + 1800W Elec heat
LCDI cord (for 208/230V units)	Standard length	in.	89	89
		mm.	2260.6	2260.6
	Extra short	in.	12	12
		mm	304.8	304.8
	Amperage	A	15	20
	Plug	NEMA	6-15	6-20
	SKU	-	L259a	L229A
Standard power cord (for 265/277V units)	Length	in.	60	60
		mm.	1524	1524
	Amperage	A	15	15
	Plug	NEMA	7-15	7-15
	SKU	-	S756A	S756A
Quick-connect whip	Length	in.	40	40
		mm.	1016	1016
	SKU	-	W224A	W224

7. WIRING DIAGRAMS

7.1 230V Heat pump only

To view the diagram as a high-resolution PDF, click the link below:

Nextac Model P Wiring Diagram 230V Heat Pump...

Figure 8. Wiring diagram 230V heat pump only

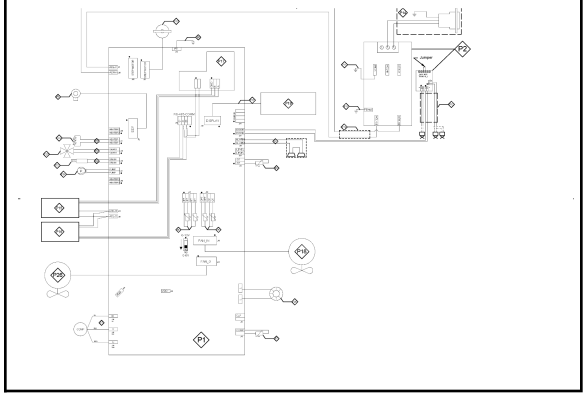

Part	Description
P1	Integrated PCB
P2	Filter 2.0 18A PCB
P3	EEV coil
P4	Pan cables harness
P5	4way valve cable + temperature sensor
P6	Indoor and Incoll temperature sensors
P7	Compressor cables + discharge temperature sensor
P8	PE IntPCB
P9	Kit wiring heating elements
P10	Display cable
P11	PE filter wiring diagram
P12	Transfer cables wiring diagram
P13	Power supply to IntPCB
P14	Power cable with USA 2.0 NC connector
P15	Power + RS485 cable for ERV 2.0NC
P16	2.0NC Rolbit power + communication cable
P17	WI-FI expansion 2.0/WLH
P18	Internal fan
P19	Display
P20	Flap motor
P21	Drain thermoactuator
P22	Heating element kit
P23	4 Way valve
P24	Drain pump
P25	PFC reactor
P26	External fan

7.2 230V Heat pump + 1.8 kW electric heat

To view the diagram as a high-resolution PDF, click the link below

Nextac Model P Wiring Diagram 230V with Elec H...

Figure 9. Wiring diagram 230V Heat pump + 1.8 kW electric heat

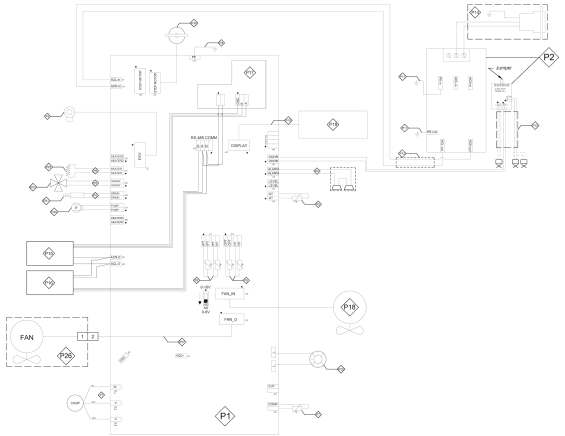

Part	Description
P1	Integrated PCB
P2	Filter 2.0 18A PCB
P3	EEV Coil
P4	Pan cables harness
P5	4way valve cable + temperature sensor
P6	Indoor and Incoll temperature sensors
P7	Compressor cables + discharge temperature sensor
P8	PE IntPCB
P9	Kit wiring heating elements
P10	Display cable
P11	PE filter wiring diagram
P12	Transfer cables wiring diagram
P13	Power supply to IntPCB
P14	Power cable with USA 2.0 NC connector
P15	Power + RS485 cable for ERV 2.0NC
P16	2.0NC Rolbit power + communication cable
P17	WI-FI expansion 2.0/WLH
P18	Internal Fan
P19	Display
P20	Flap motor
P21	Drain thermoactuator
P22	Heating element kit
P23	4 Way valve
P24	Drain pump
P25	PFC Reactor
P26	External fan
P27	–

Part	Description
P28	Heating element 2x900W - 230V version
P29	187.25Kohm Copper probe L=300mm

8. DIMENSIONS

8.1 Nextac Model P unit only (without optional wall sleeve)

To view the dimensions as a high-resolution PDF, click the link below:

Nextac Model P Dimensions (without sleeve).pdf

Figure 10. Dimensions Nextac Model P unit only

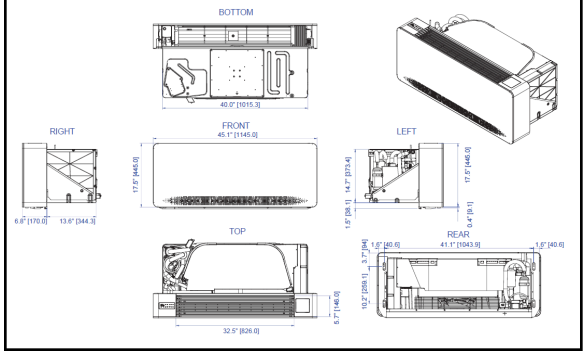

8.2 Nextac Model P unit with optional wall sleeve installed

To view the dimensions as a high-resolution PDF, click the link below:

Nextac Model P Dimensions (with sleeve).pdf

Figure 11. Dimensions Nextac Model P unit with optional wall sleeve installed

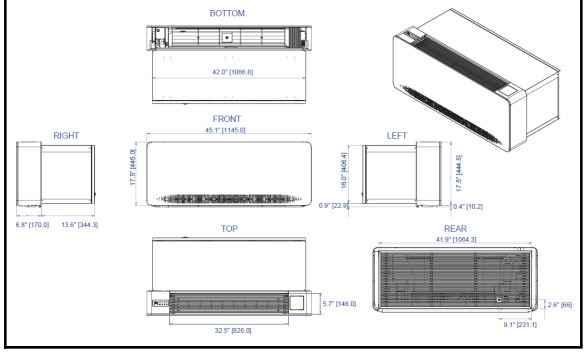

9. WARRANTY

9.1 Basic Coverage

- **Parts:** 5 years from delivery.
- **Compressor:** 10 years from delivery.
- **Labor:** 2 years from certification (only if at least 10 units are installed, the site is certified by INNOVA or self-certified, and spare stock equal to 3% of total units is maintained)
- **Controllers:** Covered under a 2-year warranty.

9.2 Optional Extended Coverage

- **Additional 2-Year Parts & Labor Warranty:** Extends the basic coverage to 4 years labor and 7 years parts.
- **Extended 10-Year Parts Warranty:** Extends parts coverage to 10 years total.
- **Extended 5-Year Full Warranty:** Extends full parts and labor coverage to 5 years total.
- **Extended 10-Year Full Warranty:** Provides a 10-year full warranty on parts, labor, and compressor.
- **Extended 15-Year Full Warranty:** Provides a 15-year full warranty on parts, labor, and compressor.

9.3 Validation Requirements

- Installation must be certified by an INNOVA technician or self-certified within 30 days.
- Installers must complete INNOVA training.
- The system must comply with local codes, use approved louvers, and be properly maintained (e.g., clean filters monthly, coils every 18 months).

For warranty service or claims, contact INNOVA Support at VIP@innova.co or (212) 204-2700.

For detailed terms and conditions, click the link below:

Nextac Warranty Terms and Conditions - 2026 - I...

10. GLOSSARY

Term	Expanded form	Definition
ADA	Americans with Disabilities Act	U.S. law that sets accessibility requirements for buildings and products.
AHRI	Air-Conditioning, Heating, and Refrigeration Institute	An organization that develops standards and certifies HVACR equipment performance.
BACnet	Building Automation and Control Network	Protocol used for communication with building management systems.
BLDC	Brushless Direct Current	Motor technology used for compressors and fans to improve efficiency and reliability.
BTU/H	British thermal units per hour	Unit of heat transfer rate, equal to the energy needed to raise one pound of water by one degree Fahrenheit per hour.
CFM	Cubic Feet per Minute	Measure of airflow volume.
COP	Coefficient of Performance	Ratio of heating or cooling output to power input.
dB(A)	Decibels with A-weighting	Unit of sound pressure level that uses A-weighting, a frequency filter that mimics how the human ear perceives loudness. It emphasizes mid-range frequencies and reduces low and very high frequencies, giving a measurement that better reflects perceived noise levels.
ECM	Electronically Commutated Motor	Highly efficient fan motor used in HVAC systems.
ERV	Energy Recovery Ventilator	Ventilation system that exchanges stale indoor air with fresh outdoor air while transferring heat and moisture between the two airstreams. This process improves indoor air quality and reduces the energy required to heat or cool the incoming air.
FLA	Full Load Amperage	Current drawn by a motor when operating at its rated horsepower and voltage.
HSPF2	Heating Seasonal Performance Factor 2	U.S. Department of Energy efficiency metric for heating performance.
LCDI	Leakage Current Detection and Interruption	Safety power cord that automatically interrupts power if leakage current is detected, protecting against electrical shock and fire hazards. UL required for PTHP models up to 250V. Models in 265V and 277V do not require an LCDI, and an LCDI is not available for them.
LRA	Locked Rotor Amps	The current drawn when a motor starts and the rotor is not turning.
MCA	Minimum Circuit Ampacity	Minimum wire size required to carry the unit's electrical load safely.
MERV	Minimum Efficiency Reporting Value	Standard that rates filter effectiveness.
MOCP	Maximum Overcurrent Protection	Maximum fuse or breaker size permitted to protect the unit.
Modbus	N/A	Open communication protocol commonly used in building and industrial automation.
OITC	Outdoor–Indoor transmission class	Rating that measures how effectively a building element reduces the transmission of outdoor noise, such as aircraft or traffic, into indoor spaces.
PTAC	Packaged Terminal Air Conditioner	Self-contained heating and cooling system installed through a wall sleeve.
PTHP	Packaged Terminal Heat Pump	Self-contained heating and cooling system installed through a wall sleeve.
R32	N/A	Refrigerant (difluoromethane) with a lower global warming potential than R410A.
Recovery + Tech.	Recovery + Technology	Proprietary technology that recovers thermal energy from exhaust air to precondition incoming air, enhance condenser efficiency, reduce compressor load, and improve energy performance.
RLA	Rated Load Amperage	The current a compressor draws under rated load and operating conditions.
SEER2	Seasonal Energy Efficiency Ratio 2	U.S. Department of Energy efficiency metric for cooling performance.
STC	Sound Transmission Class	Rating that measures how well a building element, such as a wall or window, reduces airborne sound transfer between spaces.
In. WC	inches of Water Column	Unit of pressure measurement used for airflow and gas pressure.

With over 20 years of experience in the climate comfort sector, we have a clear goal: growth through innovation. Our team is laser-focused on the conception, development, and production of innovative heating, ventilation, and air conditioning solutions. This mission has developed through bringing together technical skills, creativity, technology, design, Italian passion, and a global vision to achieve the best energy efficiency and performance.

innova.co | **USA:** 216-710-1000 **Canada:** 416-739-1000

MADE IN ITALY

© 2026 INNOVA. All rights reserved.

Revised August 10, 2026

Nextac Model P **Product Data Sheet**